Ebook Workshop Ramadhan

Cisco SuperLab 1

Network Access

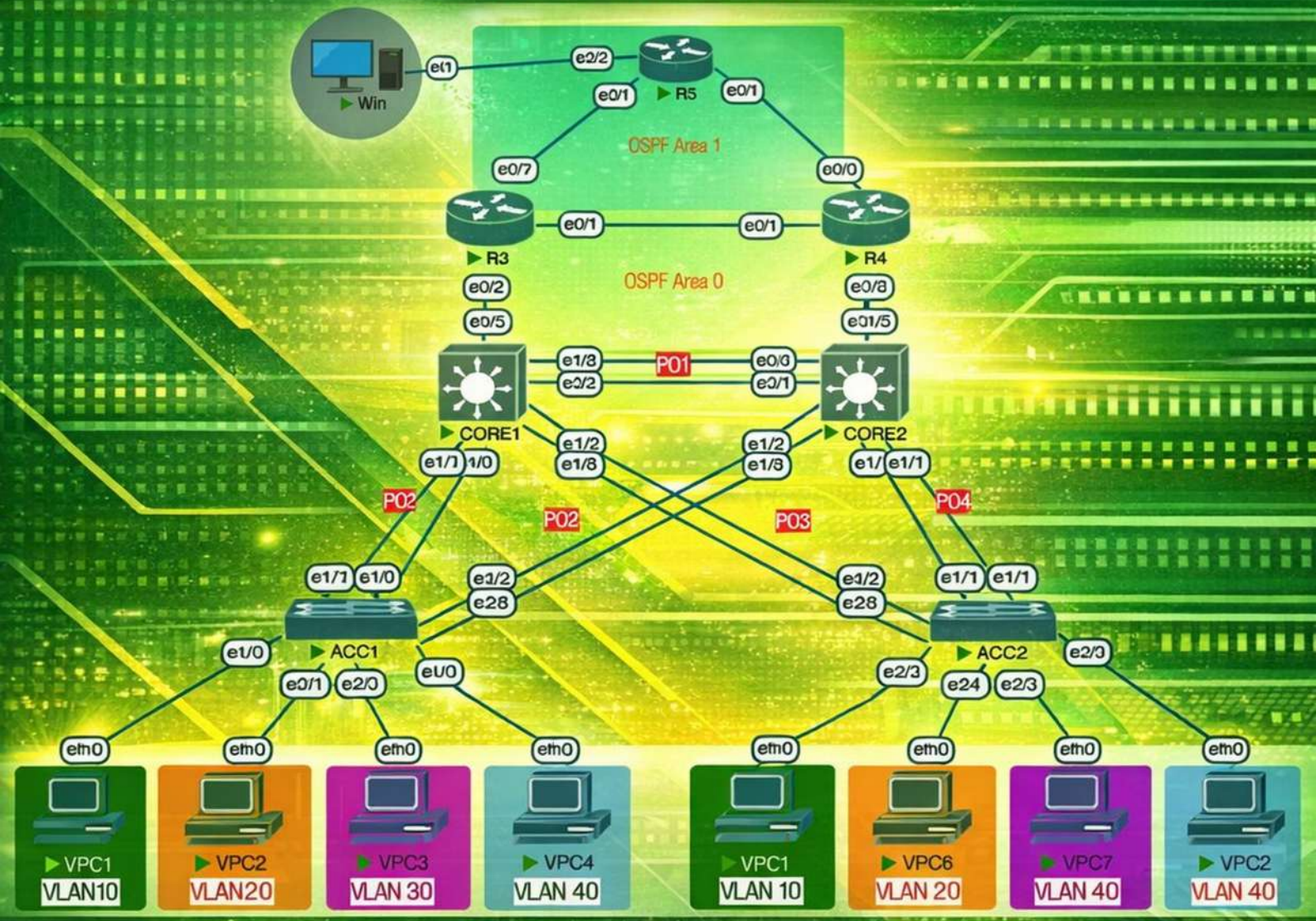

Agus Setiawan

www.nixtrain.id

2026

Table Of Contents

Lab 1. Lab Topology and IP Addressing Scheme	2
Lab 2. Configure Basic Settings	4
Lab 3. Create VLAN	9
Lab 4. Configure Trunk and L2 EtherChannel	12
Lab 5. Configure L3 Etherchannel	17
Lab 6. Configure MST Spanning-Tree	20
Lab 7. Configure Root Bridge	22
Lab 8. Configure SVI and HSRP	24
Lab 9. Configure Access Ports, PortFast and BPDU Guard	27
Lab 10. Configure DHCP Server	29
Lab 11. Configure IP Addressing and Loopback Interface	33
Lab 12. Configure OSPF, Fast Hello and BFD	38
Lab 13. Configure HSRP Tracking	44
Lab 14. Configure LLDP	47
Lab 15. Failure Testing Procedure	49
Final Configuration	64

Lab 1. Lab Topology and IP Addressing Scheme

Topology

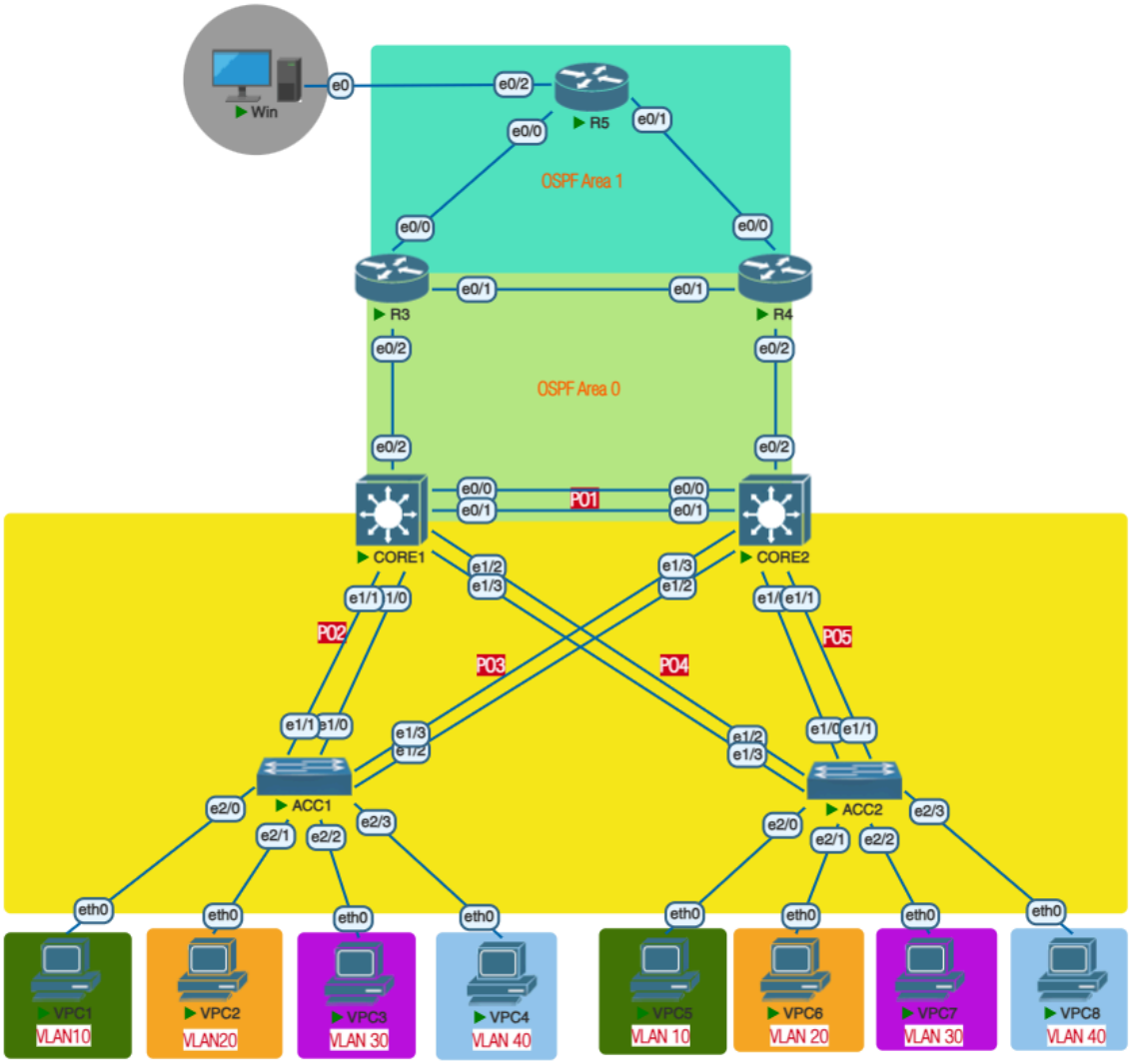

Device Information

Hostname	Image	Software Version
Router	IOL	i86bi_LinuxL3-AdvEnterpriseK9-M2_157_3_Ma
Core Switch	IOL	i86bi_Linux-L2-AdvEnterpriseK9-M_152_May_2

Access Switch	IOL	i86bi_Linux-L2-AdvEnterpriseK9-M_152_May_2
VPC	VPC	VPC
Win	Windows	win-10-x640lite

IP Addressing Scheme

Description	Network
VLAN X	192.168.X.0/24
PTP Router / Switch	10.X.Y.X/Y/24
Loopback Router / Switch	X.X.X.X/32
Win	8.8.8.8/24

Target

✔ Campus Network Architecture Design
✔ VLAN Segmentation
✔ EtherChannel (LACP)
✔ L3 EtherChannel Between CORE Switches
✔ MST (Multiple Spanning Tree)
✔ HSRP (Gateway Redundancy)
✔ HSRP Tracking
✔ OSPF Routing
✔ BFD (Bidirectional Forwarding Detection)
✔ DHCP Per VLAN
✔ LLDP
✔ Advanced Optimization
✔ Failure Testing Scenarios
✔ Verification & Monitoring

Lab 2. Configure Basic Settings

Topology

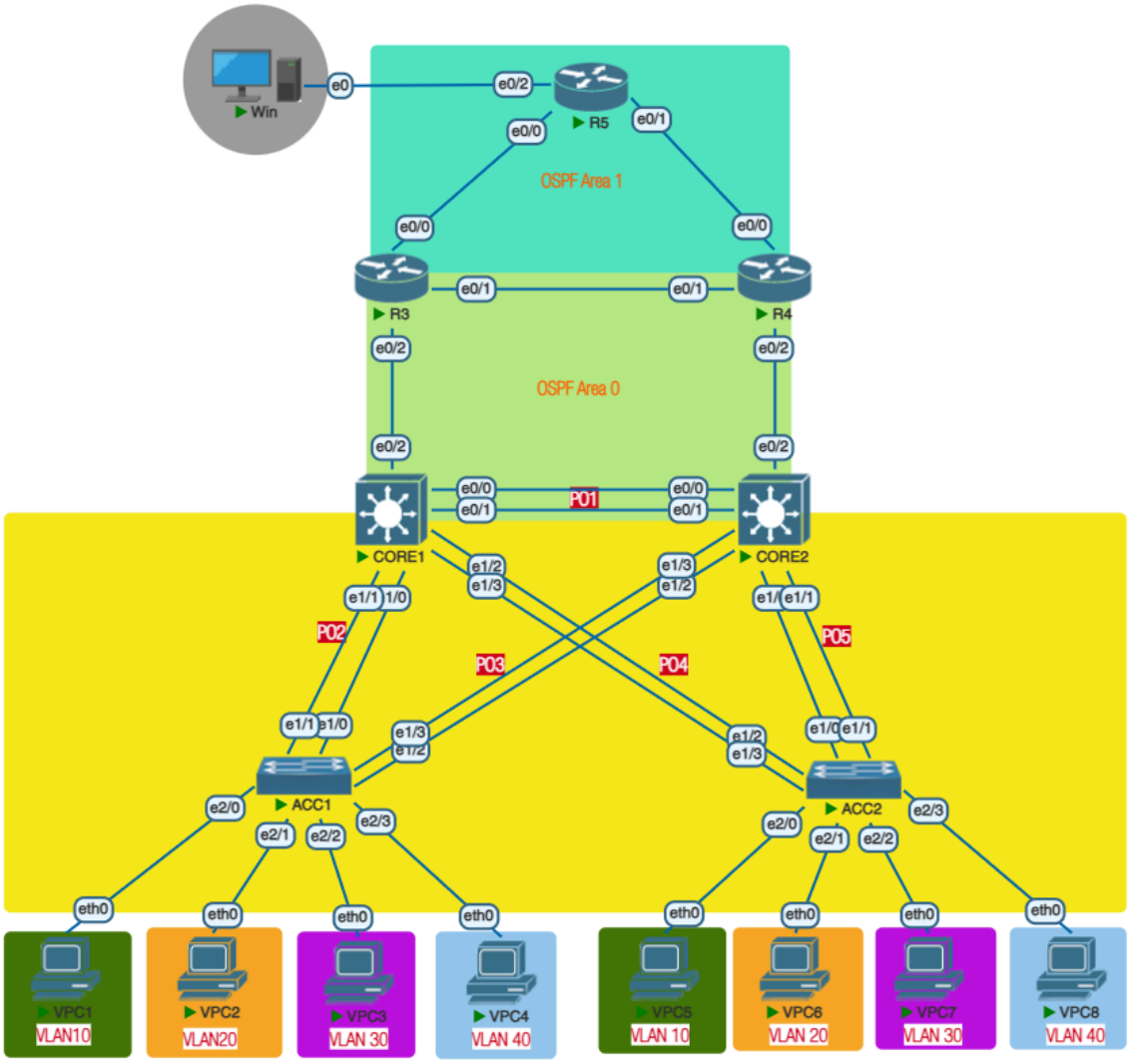

Objective

- Disable DNS lookup, enable MST mode

Configuration

CORE1

```
CORE1(config)#no ip domain-lookup
CORE1(config)#spanning-tree mode mst
```

CORE2

```
CORE2(config)#no ip domain-lookup
CORE2(config)#spanning-tree mode mst
```

ACC1

```
ACC1(config)#no ip domain-lookup
ACC1(config)#spanning-tree mode mst
```

ACC2

```
ACC2(config)#no ip domain-lookup
ACC2(config)#spanning-tree mode mst
```

Verification

- `show running-config`
- `show spanning-tree`

CORE1

```
CORE1#show run
Building configuration...

Current configuration : 1055 bytes
!
! Last configuration change at 11:17:02 UTC Sat Feb 21 2026
!
version 15.2
service timestamps debug datetime msec
service timestamps log datetime msec
no service password-encryption
service compress-config
!
hostname CORE1
!
boot-start-marker
boot-end-marker
!
!
!
no aaa new-model
!
!
!
```

```
!
!
no ip icmp rate-limit unreachable
!
!
!
no ip domain-lookup
ip cef
no ipv6 cef
!
!
!
spanning-tree mode mst
spanning-tree extend system-id
!
…
CORE1#show spanning-tree

MST0
  Spanning tree enabled protocol mstp
  Root ID    Priority    32768
             Address     aabb.cc00.0400
             This bridge is the root
             Hello Time   2 sec  Max Age 20 sec  Forward
Delay 15 sec

  Bridge ID  Priority    32768  (priority 32768 sys-id-ext 0)
             Address     aabb.cc00.0400
             Hello Time   2 sec  Max Age 20 sec  Forward
Delay 15 sec

Interface           Role Sts Cost      Prio.Nbr Type
------------------- ---- --- --------- --------
---------------------------------
Et0/0               Desg FWD 2000000   128.1    P2p
Et0/1               Desg FWD 2000000   128.2    P2p
Et0/2               Desg FWD 2000000   128.3    P2p
Et1/0               Desg FWD 2000000   128.5    P2p
Et1/1               Desg FWD 2000000   128.6    P2p
Et1/2               Desg FWD 2000000   128.7    P2p
Et1/3               Desg FWD 2000000   128.8    P2p
```

ACC1

```
ACC1#show run
Building configuration...

*Feb 21 11:18:30.686: %SYS-5-CONFIG_I: Configured from
```

```
console by console
Current configuration : 1150 bytes
!
! Last configuration change at 11:18:30 UTC Sat Feb 21 2026
!
version 15.2
service timestamps debug datetime msec
service timestamps log datetime msec
no service password-encryption
service compress-config
!
hostname ACC1
!
boot-start-marker
boot-end-marker
!
!
!
no aaa new-model
!
!
!
!
!
no ip icmp rate-limit unreachable
!
!
!
no ip domain-lookup
ip cef
no ipv6 cef
!
!
!
spanning-tree mode mst
spanning-tree extend system-id
!
…
ACC1#show spanning-tree

MST0
  Spanning tree enabled protocol mstp
  Root ID    Priority    32768
             Address     aabb.cc00.0400
             Cost        0
             Port        5 (Ethernet1/0)
             Hello Time   2 sec  Max Age 20 sec  Forward
Delay 15 sec

  Bridge ID  Priority    32768  (priority 32768 sys-id-ext 0)
             Address     aabb.cc00.0600
             Hello Time   2 sec  Max Age 20 sec  Forward
```

```
Delay 15 sec

Interface           Role Sts Cost      Prio.Nbr Type
------------------- ---- --- --------- --------
--------------------------------
Et1/0               Root FWD 2000000   128.5    P2p
Et1/1               Altn BLK 2000000   128.6    P2p
Et1/2               Altn BLK 2000000   128.7    P2p
Et1/3               Altn BLK 2000000   128.8    P2p
Et2/0               Desg FWD 2000000   128.9    P2p
Et2/1               Desg FWD 2000000   128.10   P2p
Et2/2               Desg FWD 2000000   128.11   P2p
Et2/3               Desg FWD 2000000   128.12   P2p
```

Lab 3. Create VLAN

Topology

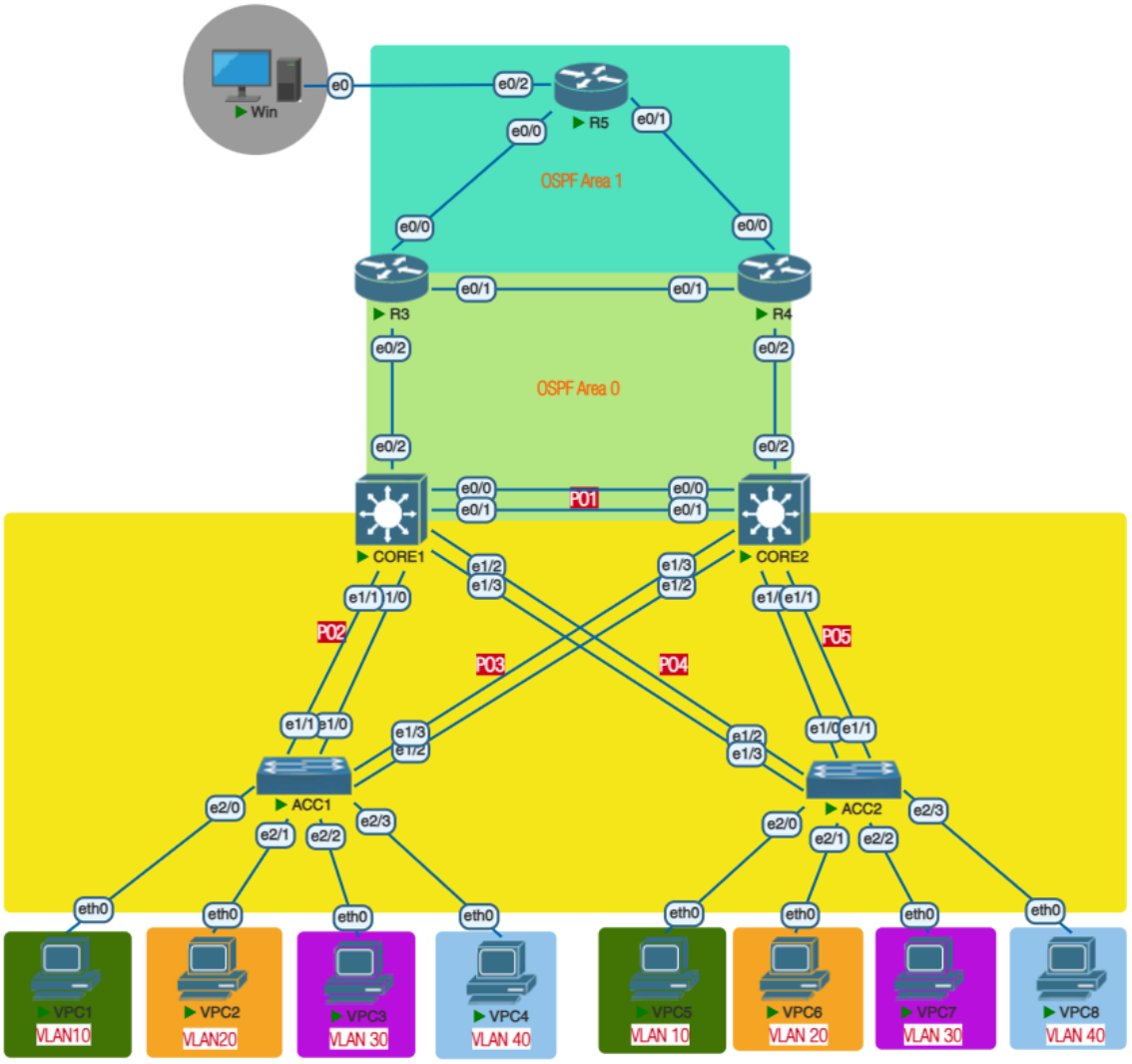

Objective

- Create VLAN 10, 20, 30, 40
- Run on CORE1, CORE2, ACC1, ACC2

Configuration

CORE1, CORE2, ACC1, ACC2

`CORE1(config)#vlan 10`
`CORE1(config-vlan)#name IT`
`CORE1(config-vlan)#vlan 20`

```
CORE1(config-vlan)#name MANAGEMENT
CORE1(config-vlan)#vlan 30
CORE1(config-vlan)#name HRD
CORE1(config-vlan)#vlan 40
CORE1(config-vlan)#name FINANCIAL
```

Verification

- `show vlan brief`
- `show flash`

CORE1

```
CORE1#show vlan brief

VLAN Name                             Status    Ports
---- -------------------------------- --------- -------------------------------
1    default                          active    Et0/0, Et0/1, Et0/2, Et0/3
                                                Et1/0, Et1/1, Et1/2, Et1/3
10   IT                               active
20   MANAGEMENT                       active
30   HRD                              active
40   FINANCIAL                        active
1002 fddi-default                     act/unsup
1003 token-ring-default               act/unsup
1004 fddinet-default                  act/unsup
1005 trnet-default                    act/unsup
CORE1#
```

CORE2

```
CORE2#show vlan brief

VLAN Name                             Status    Ports
---- -------------------------------- --------- -------------------------------
1    default                          active    Et0/0, Et0/1, Et0/2, Et0/3
                                                Et1/0, Et1/1, Et1/2, Et1/3
10   IT                               active
20   MANAGEMENT                       active
30   HRD                              active
40   FINANCIAL                        active
1002 fddi-default                     act/unsup
1003 token-ring-default               act/unsup
1004 fddinet-default                  act/unsup
1005 trnet-default                    act/unsup
CORE2#
```

ACC1

```
ACC1#show vlan brief

VLAN Name                             Status    Ports
---- -------------------------------- --------- -------------------------------
1    default                          active    Et0/0, Et0/1, Et0/2, Et0/3
                                                Et1/0, Et1/1, Et1/2, Et1/3
                                                Et2/0, Et2/1, Et2/2, Et2/3
10   IT                               active
20   MANAGEMENT                       active
30   HRD                              active
40   FINANCIAL                        active
1002 fddi-default                     act/unsup
1003 token-ring-default               act/unsup
1004 fddinet-default                  act/unsup
1005 trnet-default                    act/unsup
ACC1#
```

ACC2

```
ACC2#show vlan brief

VLAN Name                             Status    Ports
---- -------------------------------- --------- -------------------------------
1    default                          active    Et0/0, Et0/1, Et0/2, Et0/3
                                                Et1/0, Et1/1, Et1/2, Et1/3
                                                Et2/0, Et2/1, Et2/2, Et2/3
10   IT                               active
20   MANAGEMENT                       active
30   HRD                              active
40   FINANCIAL                        active
1002 fddi-default                     act/unsup
1003 token-ring-default               act/unsup
1004 fddinet-default                  act/unsup
1005 trnet-default                    act/unsup
ACC2#
```

CORE1

```
ACC2#show vlan brief

VLAN Name                             Status    Ports
---- -------------------------------- --------- -------------------------------
1    default                          active    Et0/0, Et0/1, Et0/2, Et0/3
                                                Et1/0, Et1/1, Et1/2, Et1/3
                                                Et2/0, Et2/1, Et2/2, Et2/3
10   IT                               active
20   MANAGEMENT                       active
30   HRD                              active
40   FINANCIAL                        active
1002 fddi-default                     act/unsup
1003 token-ring-default               act/unsup
1004 fddinet-default                  act/unsup
1005 trnet-default                    act/unsup
ACC2#
```

Lab 4. Configure Trunk and L2 EtherChannel

Topology

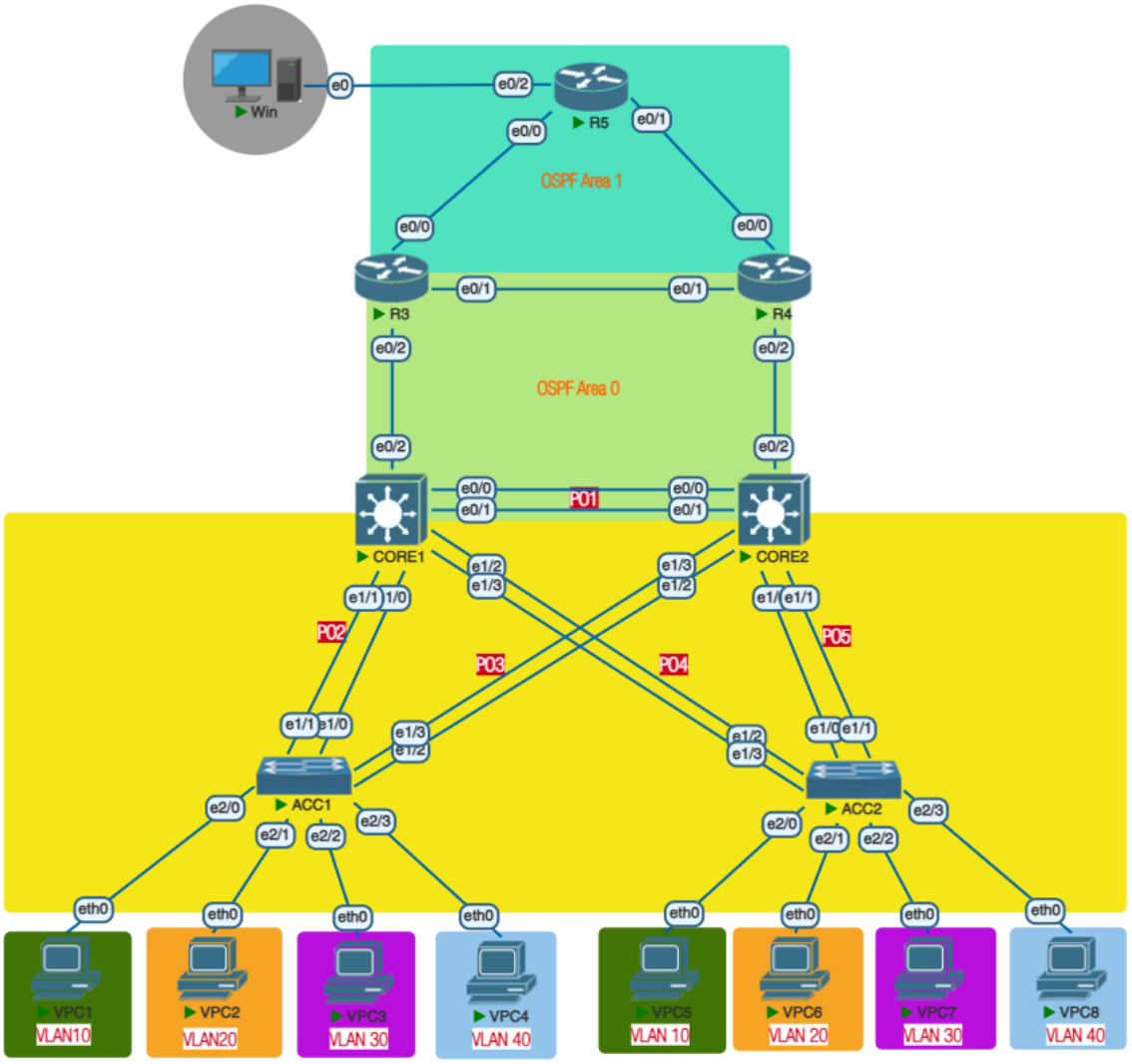

Objective

- Configure Trunk and L2 EtherChannel between switches

Configuration

CORE1

```
CORE1(config-if)#interface range e1/0 - 1
CORE1(config-if-range)# description P02 to ACC1
CORE1(config-if-range)# channel-group 2 mode active
CORE1(config-if-range)#
```

```
CORE1(config-if-range)#interface port-channel2
CORE1(config-if)# switchport trunk encapsulation dot1q
CORE1(config-if)# switchport mode trunk
CORE1(config-if)#
CORE1(config-if)#interface range e1/2 - 3
CORE1(config-if-range)# description P04 to ACC2
CORE1(config-if-range)# channel-group 4 mode active
CORE1(config-if-range)#
CORE1(config-if-range)#interface port-channel4
CORE1(config-if)# switchport trunk encapsulation dot1q
CORE1(config-if)# switchport mode trunk
CORE1(config-if)#
```

CORE2

```
CORE2(config-if)#interface range e1/0 - 1
CORE2(config-if-range)# description P05 to ACC2
CORE2(config-if-range)# channel-group 5 mode active
CORE2(config-if-range)#
CORE2(config-if-range)#interface port-channel5
CORE2(config-if)# switchport trunk encapsulation dot1q
CORE2(config-if)# switchport mode trunk
CORE2(config-if)#
CORE2(config-if)#interface range e1/2 - 3
CORE2(config-if-range)# description P03 to ACC1
CORE2(config-if-range)# channel-group 3 mode active
CORE2(config-if-range)#
CORE2(config-if-range)#interface port-channel3
CORE2(config-if)# switchport trunk encapsulation dot1q
CORE2(config-if)# switchport mode trunk
```

ACC1

```
ACC1(config)#interface range e1/0 - 1
ACC1(config-if-range)# description P02 to CORE1
ACC1(config-if-range)# channel-group 2 mode passive
ACC1(config-if-range)#
ACC1(config-if-range)#interface port-channel2
ACC1(config-if)# switchport trunk encapsulation dot1q
ACC1(config-if)# switchport mode trunk
ACC1(config-if)#
ACC1(config-if)#interface range e1/2 - 3
ACC1(config-if-range)# description P03 to CORE2
ACC1(config-if-range)# channel-group 3 mode passive
ACC1(config-if-range)#
ACC1(config-if-range)#interface port-channel3
ACC1(config-if)# switchport trunk encapsulation dot1q
```

```
ACC1(config-if)# switchport mode trunk
```

ACC2

```
ACC2(config)#interface range e1/0 - 1
ACC2(config-if-range)# description P05 to CORE1
ACC2(config-if-range)# channel-group 5 mode passive
ACC2(config-if-range)#
ACC2(config-if-range)#interface port-channel5
ACC2(config-if)# switchport trunk encapsulation dot1q
ACC2(config-if)# switchport mode trunk
ACC2(config-if)#
ACC2(config-if)#interface range e1/2 - 3
ACC2(config-if-range)# description P04 to CORE2
ACC2(config-if-range)# channel-group 4 mode active
ACC2(config-if-range)#
ACC2(config-if-range)#interface port-channel4
ACC2(config-if)# switchport trunk encapsulation dot1q
ACC2(config-if)# switchport mode trunk
```

Verification

- `show ip interface brief`
- `show interface trunk`
- `show etherchannel summary`

CORE1

```
CORE1#show ip interface brief
Interface              IP-Address      OK? Method Status                Protocol
Ethernet0/0            unassigned      YES unset  administratively down down
Ethernet0/1            unassigned      YES unset  administratively down down
Ethernet0/2            unassigned      YES unset  up                    up
Ethernet0/3            unassigned      YES unset  down                  down
Ethernet1/0            unassigned      YES unset  up                    up
Ethernet1/1            unassigned      YES unset  up                    up
Ethernet1/2            unassigned      YES unset  up                    up
Ethernet1/3            unassigned      YES unset  up                    up
Port-channel2          unassigned      YES unset  up                    up
Port-channel4          unassigned      YES unset  up                    up
CORE1#
CORE1#show interface trunk

Port        Mode             Encapsulation  Status        Native vlan
Po2         on               802.1q         trunking      1
Po4         on               802.1q         trunking      1

Port        Vlans allowed on trunk
Po2         1-4094
Po4         1-4094

Port        Vlans allowed and active in management domain
Po2         1,10,20,30,40
Po4         1,10,20,30,40

Port        Vlans in spanning tree forwarding state and not pruned
Po2         1,10,20,30,40
Po4         1,10,20,30,40
CORE1#
CORE1#show etherchannel summary
Flags:  D - down        P - bundled in port-channel
        I - stand-alone s - suspended
        H - Hot-standby (LACP only)
        R - Layer3      S - Layer2
        U - in use      N - not in use, no aggregation
        f - failed to allocate aggregator

        M - not in use, minimum links not met
        m - not in use, port not aggregated due to minimum links not met
        u - unsuitable for bundling
        w - waiting to be aggregated
        d - default port

        A - formed by Auto LAG


Number of channel-groups in use: 2
Number of aggregators:           2

Group  Port-channel  Protocol    Ports
------+-------------+-----------+-----------------------------------------------
2      Po2(SU)         LACP      Et1/0(P)    Et1/1(P)
4      Po4(SU)         LACP      Et1/2(P)    Et1/3(P)

CORE1#
```

ACC1

```
ACC1#show ip interface brief
Interface              IP-Address      OK? Method Status                Protocol
Ethernet0/0            unassigned      YES unset  down                  down
Ethernet0/1            unassigned      YES unset  down                  down
Ethernet0/2            unassigned      YES unset  down                  down
Ethernet0/3            unassigned      YES unset  down                  down
Ethernet1/0            unassigned      YES unset  up                    up
Ethernet1/1            unassigned      YES unset  up                    up
Ethernet1/2            unassigned      YES unset  up                    up
Ethernet1/3            unassigned      YES unset  up                    up
Ethernet2/0            unassigned      YES unset  up                    up
Ethernet2/1            unassigned      YES unset  up                    up
Ethernet2/2            unassigned      YES unset  up                    up
Ethernet2/3            unassigned      YES unset  up                    up
Port-channel2          unassigned      YES unset  up                    up
Port-channel3          unassigned      YES unset  up                    up
ACC1#
ACC1#show interface trunk

Port        Mode             Encapsulation  Status        Native vlan
Po2         on               802.1q         trunking      1
Po3         on               802.1q         trunking      1

Port        Vlans allowed on trunk
Po2         1-4094
Po3         1-4094

Port        Vlans allowed and active in management domain
Po2         1,10,20,30,40
Po3         1,10,20,30,40

Port        Vlans in spanning tree forwarding state and not pruned
Po2         1,10,20,30,40
Po3         none
ACC1#
ACC1#show etherchannel summary
Flags:  D - down        P - bundled in port-channel
        I - stand-alone s - suspended
        H - Hot-standby (LACP only)
        R - Layer3      S - Layer2
        U - in use      N - not in use, no aggregation
        f - failed to allocate aggregator

        M - not in use, minimum links not met
        m - not in use, port not aggregated due to minimum links not met
        u - unsuitable for bundling
        w - waiting to be aggregated
        d - default port

        A - formed by Auto LAG


Number of channel-groups in use: 2
Number of aggregators:           2

Group  Port-channel  Protocol    Ports
------+-------------+-----------+-----------------------------------------------
2      Po2(SU)         LACP      Et1/0(P)    Et1/1(P)
3      Po3(SU)         LACP      Et1/2(P)    Et1/3(P)

ACC1#
```

Lab 5. Configure L3 Etherchannel

Topology

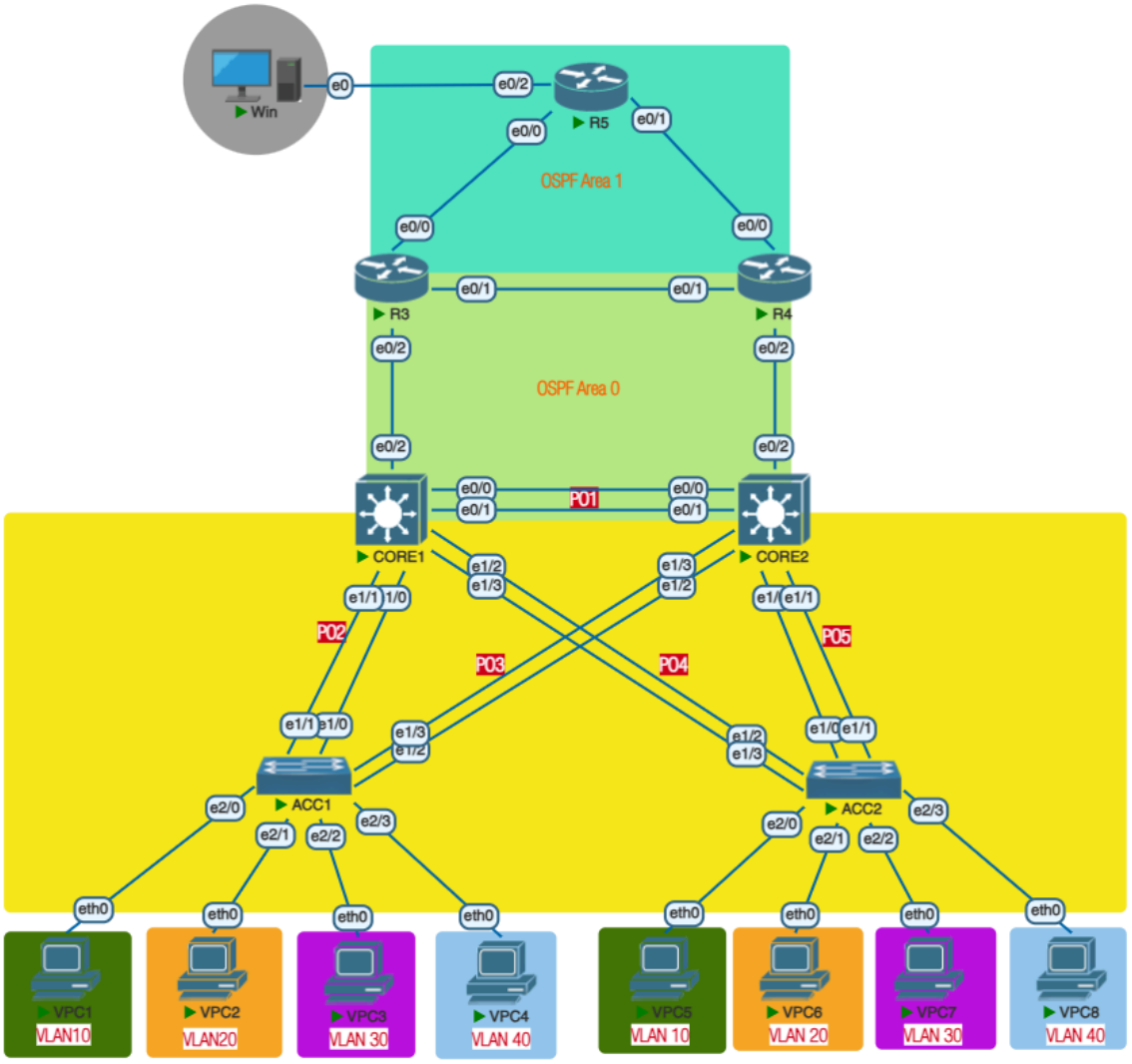

Objective

- Configure L3 EtherChannel between switches

Configuration

CORE1

```
CORE1(config-if)#interface range e0/0 - 1
CORE1(config-if-range)# description P01 to CORE2
CORE1(config-if-range)# channel-group 1 mode active
CORE1(config-if-range)#
```

```
CORE1(config-if-range)#interface port-channel1
CORE1(config-if)# no switchport
CORE1(config-if)# ip address 10.1.2.1 255.255.255.0
CORE1(config-if)# no shutdown
```

CORE2

```
CORE2(config)#interface range e0/0 - 1
CORE2(config-if-range)# description P01 to CORE1
CORE2(config-if-range)# channel-group 1 mode active
CORE2(config-if-range)#
CORE2(config-if-range)#interface port-channel1
CORE2(config-if)# no switchport
CORE2(config-if)# ip add 10.1.2.2 255.255.255.0
CORE2(config-if)# no shutdown
```

Verification

- `show ip interface brief`
- `show interface trunk`
- `show etherchannel summary`
- `ping between core`

CORE1

```
CORE1#show ip int brief
Interface              IP-Address      OK? Method Status                Protocol
Ethernet0/0            unassigned      YES manual up                    up
Ethernet0/1            unassigned      YES manual up                    up
Ethernet0/2            unassigned      YES unset  up                    up
Ethernet0/3            unassigned      YES unset  down                  down
Ethernet1/0            unassigned      YES unset  up                    up
Ethernet1/1            unassigned      YES unset  up                    up
Ethernet1/2            unassigned      YES unset  up                    up
Ethernet1/3            unassigned      YES unset  up                    up
Port-channel1          10.1.2.1        YES manual up                    up
Port-channel2          unassigned      YES unset  up                    up
Port-channel4          unassigned      YES unset  up                    up
CORE1#
CORE1#show interface trunk

Port        Mode             Encapsulation  Status        Native vlan
Po2         on               802.1q         trunking      1
Po4         on               802.1q         trunking      1

Port        Vlans allowed on trunk
Po2         1-4094
Po4         1-4094

Port        Vlans allowed and active in management domain
Po2         1,10,20,30,40
Po4         1,10,20,30,40

Port        Vlans in spanning tree forwarding state and not pruned
Po2         1,10,20,30,40
Po4         1,10,20,30,40
CORE1#
CORE1#show etherchannel summary
Flags:  D - down        P - bundled in port-channel
        I - stand-alone s - suspended
        H - Hot-standby (LACP only)
        R - Layer3      S - Layer2
        U - in use      N - not in use, no aggregation
        f - failed to allocate aggregator

        M - not in use, minimum links not met
        m - not in use, port not aggregated due to minimum links not met
        u - unsuitable for bundling
        w - waiting to be aggregated
        d - default port

        A - formed by Auto LAG


Number of channel-groups in use: 3
Number of aggregators:           3

Group  Port-channel  Protocol    Ports
------+-------------+-----------+-----------------------------------------------
1      Po1(RU)         LACP      Et0/0(P)    Et0/1(P)
2      Po2(SU)         LACP      Et1/0(P)    Et1/1(P)
4      Po4(SU)         LACP      Et1/2(P)    Et1/3(P)

CORE1#ping 10.1.2.2
Type escape sequence to abort.
Sending 5, 100-byte ICMP Echos to 10.1.2.2, timeout is 2 seconds:
!!!!!
Success rate is 100 percent (5/5), round-trip min/avg/max = 1/1/1 ms
CORE1#
```

Lab 6. Configure MST Spanning-Tree

Topology

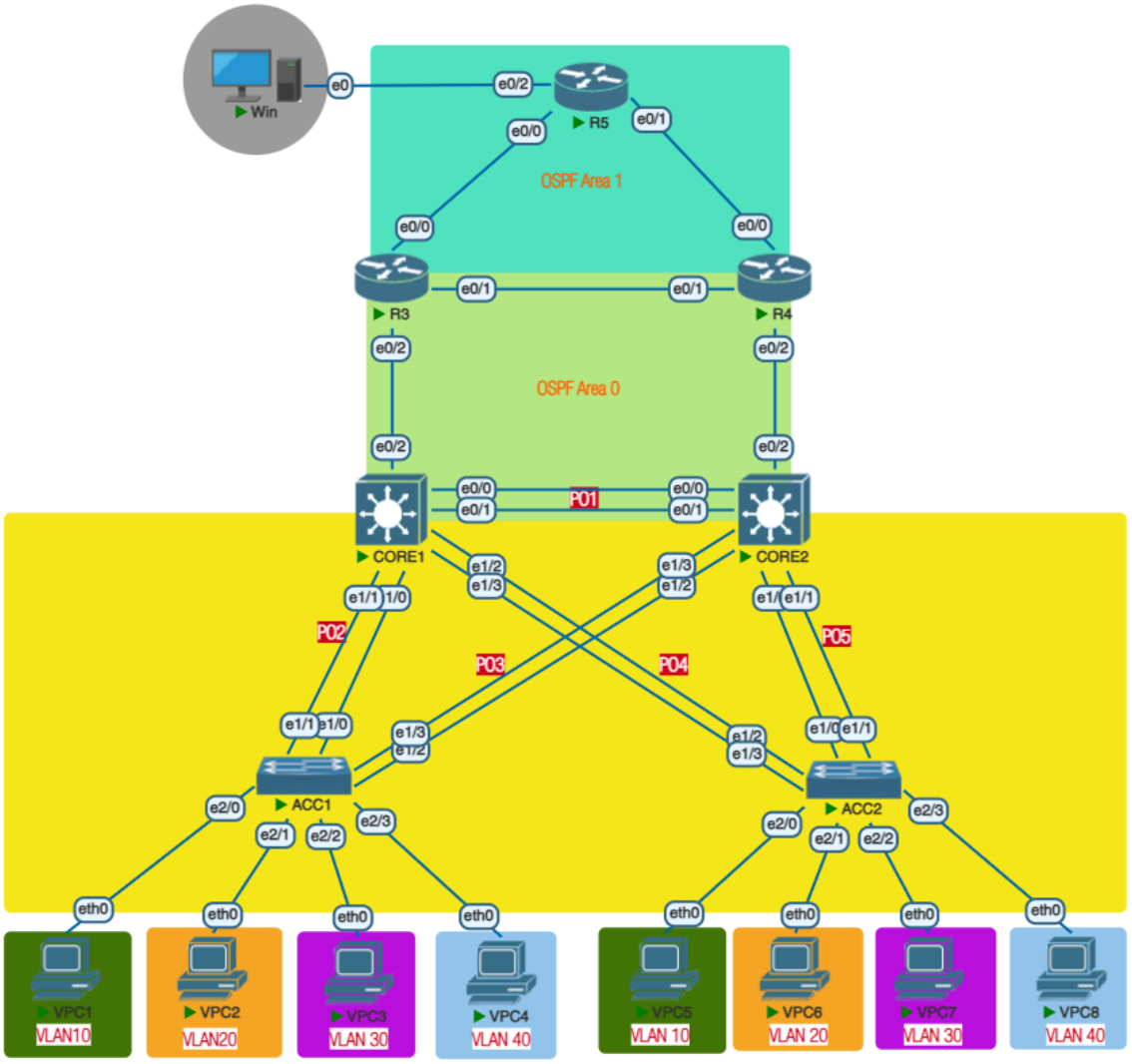

Objective

- Configure MST region and instance mapping
- Run on CORE1, CORE2, ACC1, ACC2

Configuration

CORE1, CORE2, ACC1, ACC2

`CORE1(config)#spanning-tree mst configuration`
`CORE1(config-mst)#name NIXTRAIN`
`CORE1(config-mst)#revision 1`

```
CORE1(config-mst)#
CORE1(config-mst)#instance 1 vlan 10,30
CORE1(config-mst)#instance 2 vlan 20,40
```

Verification

- `show running-config`
- `show spanning-tree mst`
- `show spanning-tree mst configuration`

CORE1

```
CORE1#show spanning-tree mst

##### MST0    vlans mapped:   1-9,11-19,21-29,31-39,41-4094
Bridge        address aabb.cc00.0400  priority      32768 (32768 sysid 0)
Root          this switch for the CIST
Operational   hello time 2 , forward delay 15, max age 20, txholdcount 6
Configured    hello time 2 , forward delay 15, max age 20, max hops    20

Interface        Role Sts Cost      Prio.Nbr Type
---------------- ---- --- --------- -------- -------------------------------
Et0/2            Desg FWD 2000000   128.3    P2p
Po2              Desg FWD 1000000   128.66   P2p
Po4              Desg FWD 1000000   128.68   P2p

##### MST1    vlans mapped:   10,30
Bridge        address aabb.cc00.0400  priority      32769 (32768 sysid 1)
Root          this switch for MST1

Interface        Role Sts Cost      Prio.Nbr Type
---------------- ---- --- --------- -------- -------------------------------
Po2              Desg FWD 1000000   128.66   P2p
Po4              Desg FWD 1000000   128.68   P2p

##### MST2    vlans mapped:   20,40
Bridge        address aabb.cc00.0400  priority      32770 (32768 sysid 2)
Root          this switch for MST2

Interface        Role Sts Cost      Prio.Nbr Type
---------------- ---- --- --------- -------- -------------------------------
Po2              Desg FWD 1000000   128.66   P2p
Po4              Desg FWD 1000000   128.68   P2p

CORE1#
CORE1#show spanning-tree mst configuration
Name      [NIXTRAIN]
Revision  1     Instances configured 3

Instance  Vlans mapped
--------  -------------------------------------------------------------------
0         1-9,11-19,21-29,31-39,41-4094
1         10,30
2         20,40
-------------------------------------------------------------------------------
CORE1#
```

Lab 7. Configure Root Bridge

Topology

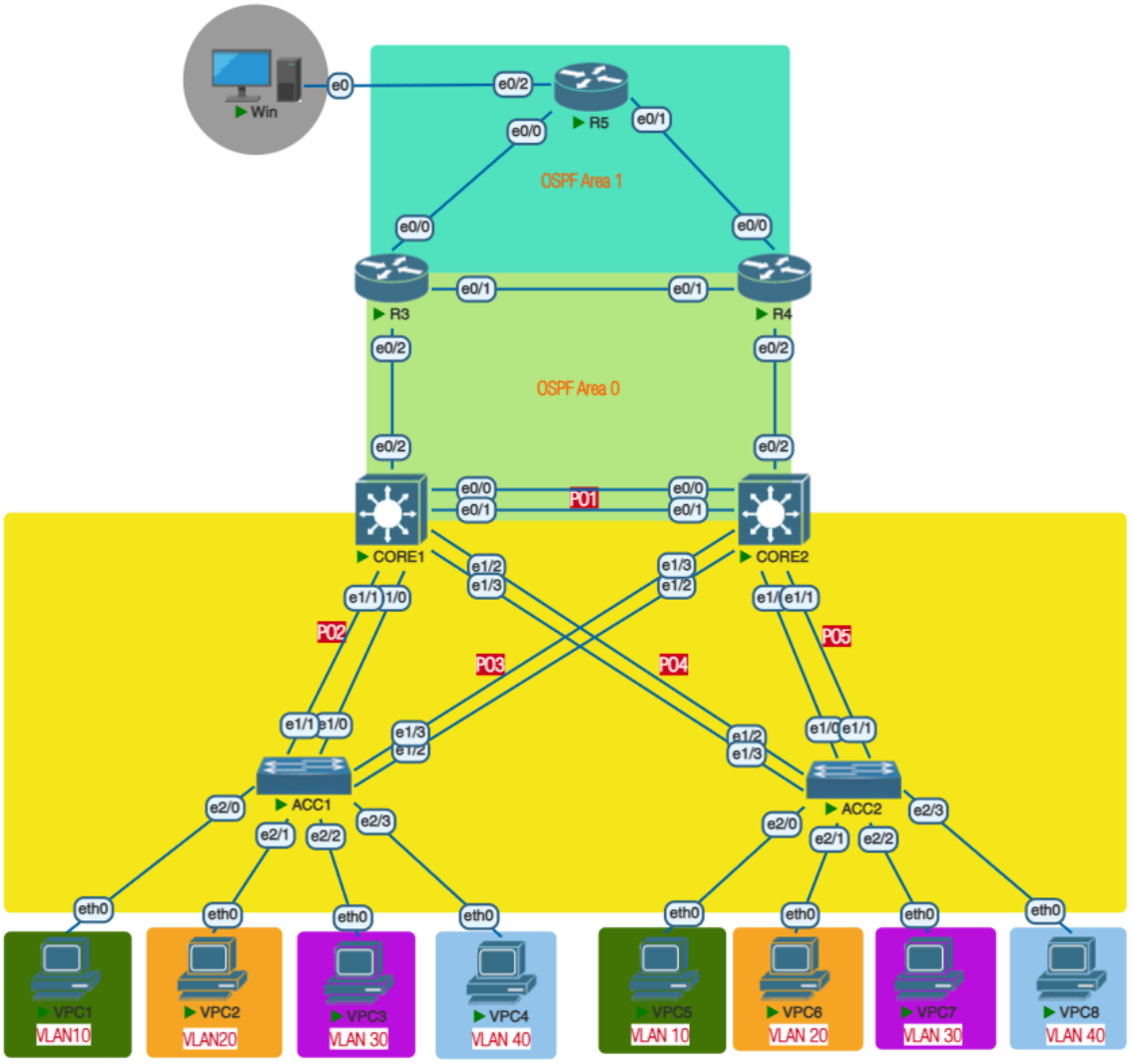

Objective

- Configure Root Bridge
- Align STP Root with HSRP Active

Configuration

CORE1 (Root for MST 1)

```
CORE1(config)#spanning-tree mst 1 priority 4096
CORE1(config)#spanning-tree mst 2 priority 8192
```

CORE2 (Root for MST 2)

```
CORE2(config)#spanning-tree mst 1 priority 8192
CORE2(config)#spanning-tree mst 2 priority 4096
```

Verification

- `show running-config`
- `show spanning-tree mst`

CORE1

```
CORE1#show spanning-tree mst 1

##### MST1    vlans mapped:   10,30
Bridge        address aabb.cc00.0400  priority      4097  (4096 sysid 1)
Root          this switch for MST1

Interface        Role Sts Cost      Prio.Nbr Type
---------------- ---- --- --------- -------- -------------------------------
Po2              Desg FWD 1000000   128.66   P2p
Po4              Desg FWD 1000000   128.68   P2p

CORE1#
```

CORE2

```
CORE2#show spanning-tree mst 2

##### MST2    vlans mapped:   20,40
Bridge        address aabb.cc00.0500  priority      4098  (4096 sysid 2)
Root          this switch for MST2

Interface        Role Sts Cost      Prio.Nbr Type
---------------- ---- --- --------- -------- -------------------------------
Po5              Desg FWD 1000000   128.66   P2p
Po3              Desg FWD 1000000   128.67   P2p

CORE2#
```

Lab 8. Configure SVI and HSRP

Topology

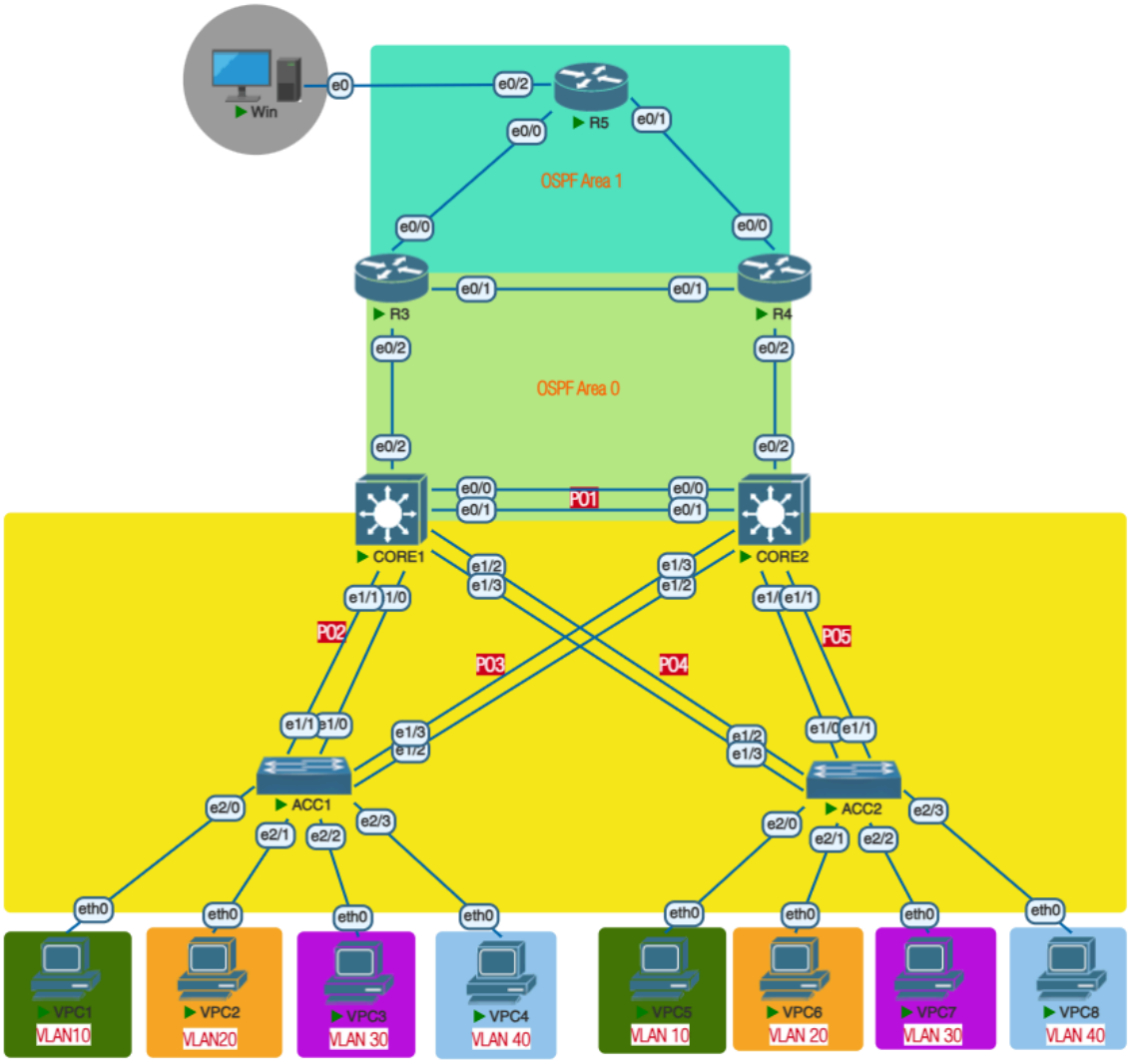

Objective

- Configure gateway redundancy
- CORE1:
  VLAN10 ***Active***
  VLAN20 ***Standby***
  VLAN30 ***Active***
  VLAN40 ***Standby***

  CORE2 opposite.

Configuration

CORE1

```
CORE1(config)#interface vlan 10
CORE1(config-if)# ip address 192.168.10.2 255.255.255.0
CORE1(config-if)# standby 10 ip 192.168.10.1
CORE1(config-if)# standby 10 priority 110
CORE1(config-if)# standby 10 preempt
CORE1(config-if)#
CORE1(config-if)#interface vlan 20
CORE1(config-if)# ip address 192.168.20.2 255.255.255.0
CORE1(config-if)# standby 20 ip 192.168.20.1
CORE1(config-if)# standby 20 priority 90
CORE1(config-if)# standby 20 preempt
CORE1(config-if)#
CORE1(config-if)#interface vlan 30
CORE1(config-if)# ip address 192.168.30.2 255.255.255.0
CORE1(config-if)# standby 30 ip 192.168.30.1
CORE1(config-if)# standby 30 priority 110
CORE1(config-if)# standby 30 preempt
CORE1(config-if)#
CORE1(config-if)#interface vlan 40
CORE1(config-if)# ip address 192.168.40.2 255.255.255.0
CORE1(config-if)# standby 40 ip 192.168.40.1
CORE1(config-if)# standby 40 priority 90
CORE1(config-if)# standby 40 preempt
```

CORE2

```
CORE2(config)#interface vlan 10
CORE2(config-if)# ip address 192.168.10.3 255.255.255.0
CORE2(config-if)# standby 10 ip 192.168.10.1
CORE2(config-if)# standby 10 priority 90
CORE2(config-if)# standby 10 preempt
CORE2(config-if)#
CORE2(config-if)#interface vlan 20
CORE2(config-if)# ip address 192.168.20.3 255.255.255.0
CORE2(config-if)# standby 20 ip 192.168.20.1
CORE2(config-if)# standby 20 priority 110
CORE2(config-if)# standby 20 preempt
CORE2(config-if)#
CORE2(config-if)#interface vlan 30
CORE2(config-if)# ip address 192.168.30.3 255.255.255.0
CORE2(config-if)# standby 30 ip 192.168.30.1
CORE2(config-if)# standby 30 priority 90
CORE2(config-if)# standby 30 preempt
CORE2(config-if)#
CORE2(config-if)#interface vlan 40
```

```
CORE2(config-if)# ip address 192.168.40.3 255.255.255.0
CORE2(config-if)# standby 40 ip 192.168.40.1
CORE2(config-if)# standby 40 priority 110
CORE2(config-if)# standby 40 preempt
```

Verification

- `show running-config`
- `show ip interface brief`
- `show standby`

CORE1

```
CORE1#show ip int brief | inc Vlan
Vlan10                 192.168.10.2    YES manual up                    up
Vlan20                 192.168.20.2    YES manual up                    up
Vlan30                 192.168.30.2    YES manual up                    up
Vlan40                 192.168.40.2    YES manual up                    up
CORE1#
CORE1#
CORE1#show standby brief
                     P indicates configured to preempt.
                     |
Interface   Grp  Pri P State   Active          Standby         Virtual IP
Vl10        10   110 P Active  local           192.168.10.3    192.168.10.1
Vl20        20   90  P Standby 192.168.20.3    local           192.168.20.1
Vl30        30   110 P Active  local           192.168.30.3    192.168.30.1
Vl40        40   90  P Standby 192.168.40.3    local           192.168.40.1
CORE1#
```

CORE2

```
CORE2#show ip int brief | inc Vlan
Vlan10                 192.168.10.3    YES manual up                    up
Vlan20                 192.168.20.3    YES manual up                    up
Vlan30                 192.168.30.3    YES manual up                    up
Vlan40                 192.168.40.3    YES manual up                    up
CORE2#
CORE2#
CORE2#show standby brief
                     P indicates configured to preempt.
                     |
Interface   Grp  Pri P State   Active          Standby         Virtual IP
Vl10        10   90  P Standby 192.168.10.2    local           192.168.10.1
Vl20        20   110 P Active  local           192.168.20.2    192.168.20.1
Vl30        30   90  P Standby 192.168.30.2    local           192.168.30.1
Vl40        40   110 P Active  local           192.168.40.2    192.168.40.1
CORE2#
```

Lab 9. Configure Access Ports, PortFast and BPDU Guard

Topology

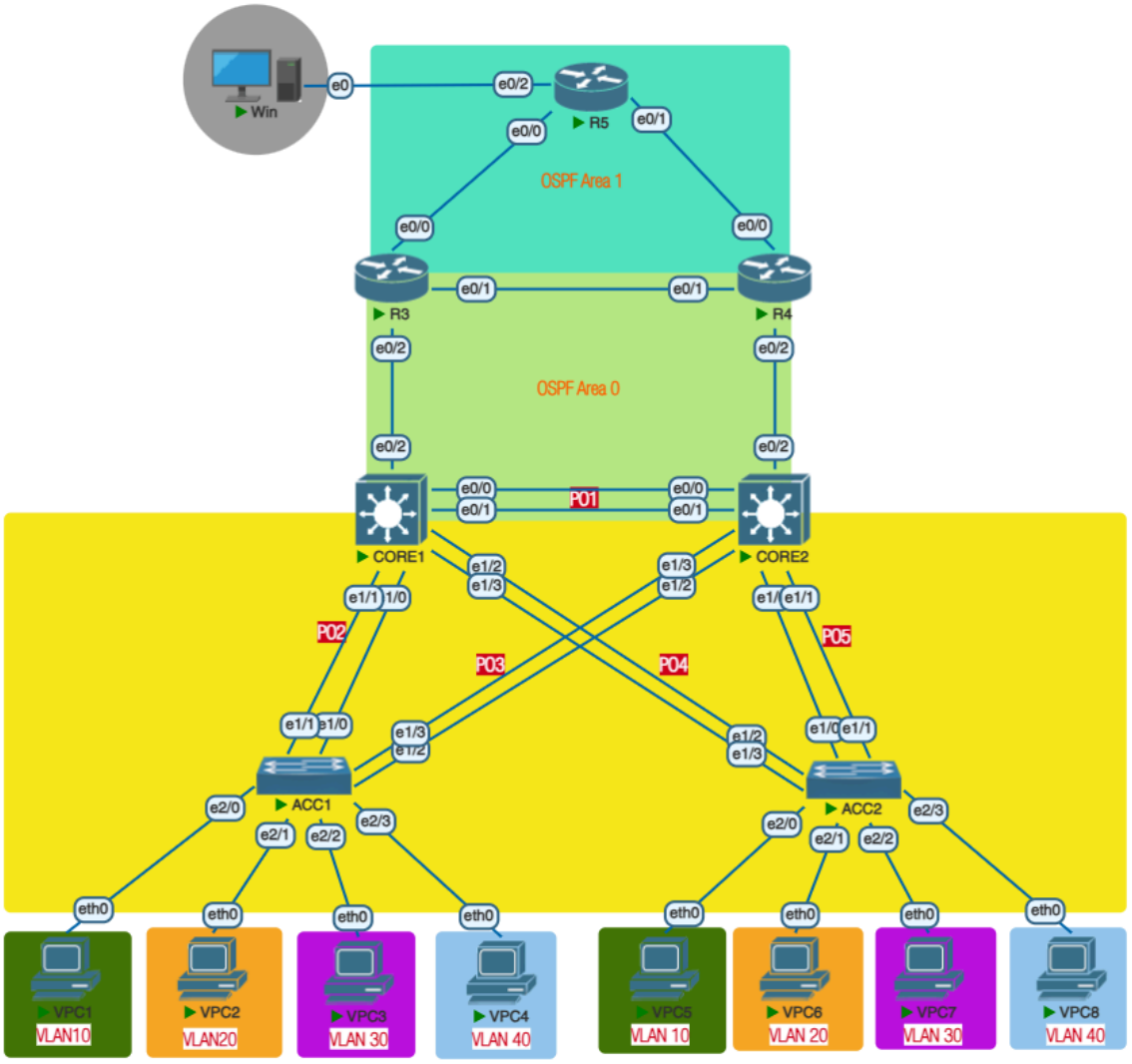

Objective

- Configure access ports, portfast and bpdu guard

Configuration

ACC1, ACC2
`ACC1(config)#interface e2/0` `ACC1(config-if)# switchport mode access`

```
ACC1(config-if)# switchport access vlan 10
ACC1(config-if)# spanning-tree portfast
ACC1(config-if)# spanning-tree bpduguard enable
ACC1(config-if)#
ACC1(config-if)#interface e2/1
ACC1(config-if)# switchport mode access
ACC1(config-if)# switchport access vlan 20
ACC1(config-if)# spanning-tree portfast
ACC1(config-if)# spanning-tree bpduguard enable
ACC1(config-if)#
ACC1(config-if)#interface e2/2
ACC1(config-if)# switchport access vlan 30
ACC1(config-if)# spanning-tree portfast
ACC1(config-if)# spanning-tree bpduguard enable
ACC1(config-if)#
ACC1(config-if)#interface e2/3
ACC1(config-if)# switchport access vlan 40
ACC1(config-if)# spanning-tree portfast
ACC1(config-if)# spanning-tree bpduguard enable
ACC1(config-if)#
```

Verification

- `show running-config`
- `show vlan brief`
- `show spanning-tree detail`

CORE1

```
ACC2#show vlan brief

VLAN Name                             Status    Ports
---- -------------------------------- --------- -------------------------------
1    default                          active    Et0/0, Et0/1, Et0/2, Et0/3
10   IT                               active    Et2/0
20   MANAGEMENT                       active    Et2/1
30   HRD                              active    Et2/2
40   FINANCIAL                        active    Et2/3
1002 fddi-default                     act/unsup
1003 token-ring-default               act/unsup
1004 fddinet-default                  act/unsup
1005 trnet-default                    act/unsup
ACC2#
ACC2#
ACC2#show spanning-tree detail | s Port 1
 Port 10 (Ethernet2/1) of MST0 is designated forwarding
   Port path cost 2000000, Port priority 128, Port Identifier 128.10.
   Designated root has priority 32768, address aabb.cc00.0400
   Designated bridge has priority 32768, address aabb.cc00.0700
   Designated port id is 128.10, designated path cost 0
   Timers: message age 0, forward delay 0, hold 0
   Number of transitions to forwarding state: 1
   The port is in the portfast edge mode
   Link type is point-to-point by default, Internal
   Bpdu guard is enabled
   PVST Simulation is enabled by default
   BPDU: sent 214, received 0
```

Lab 10. Configure DHCP Server

Topology

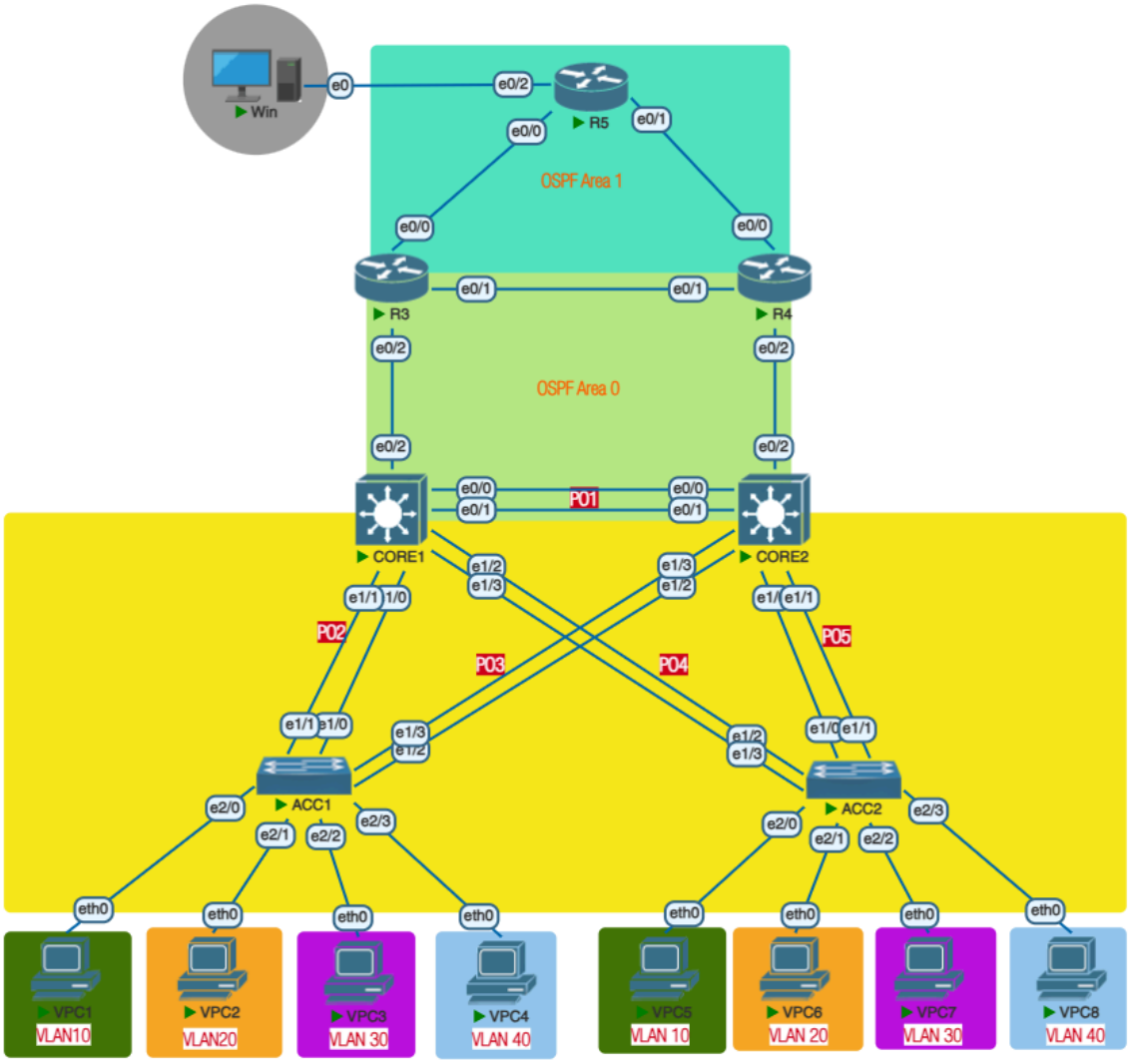

Objective

- Configure DHCP Server

Configuration

CORE1

```
CORE1(config)#ip dhcp excluded-address 192.168.10.1
192.168.10.20
CORE1(config)#ip dhcp excluded-address 192.168.30.1
192.168.30.20
```

```
CORE1(config)#
CORE1(config)#ip dhcp pool VLAN10
CORE1(dhcp-config)# network 192.168.10.0 255.255.255.0
CORE1(dhcp-config)# default-router 192.168.10.1
CORE1(dhcp-config)# dns-server 8.8.8.8
CORE1(dhcp-config)#
CORE1(dhcp-config)#ip dhcp pool VLAN30
CORE1(dhcp-config)# network 192.168.30.0 255.255.255.0
CORE1(dhcp-config)# default-router 192.168.30.1
CORE1(dhcp-config)# dns-server 8.8.8.8
```

CORE2

```
CORE2(config)#ip dhcp excluded-address 192.168.20.1
192.168.20.20
CORE2(config)#ip dhcp excluded-address 192.168.40.1
192.168.40.20
CORE2(config)#
CORE2(config)#ip dhcp pool VLAN20
CORE2(dhcp-config)# network 192.168.20.0 255.255.255.0
CORE2(dhcp-config)# default-router 192.168.20.1
CORE2(dhcp-config)# dns-server 8.8.8.8
CORE2(dhcp-config)#
CORE2(dhcp-config)#ip dhcp pool VLAN40
CORE2(dhcp-config)# network 192.168.40.0 255.255.255.0
CORE2(dhcp-config)# default-router 192.168.40.1
CORE2(dhcp-config)# dns-server 8.8.8.8
```

Verification

- `show running-config`
- `show ip dhcp binding`
- `ip dhcp client setting on VPC`
- `Ping from VPC to CORE switch`

VPC1

```
VPC1> ip dhcp
DDORA IP 192.168.10.21/24 GW 192.168.10.1

VPC1> show ip

NAME        : VPC1[1]
IP/MASK     : 192.168.10.21/24
GATEWAY     : 192.168.10.1
DNS         : 8.8.8.8
DHCP SERVER : 192.168.10.2
DHCP LEASE  : 86396, 86400/43200/75600
MAC         : 00:50:79:66:68:24
LPORT       : 20000
RHOST:PORT  : 127.0.0.1:30000
MTU         : 1500

VPC1>
```

VPC2

```
VPC2> ip dhcp
DDORA IP 192.168.20.21/24 GW 192.168.20.1

VPC2> show ip

NAME        : VPC2[1]
IP/MASK     : 192.168.20.21/24
GATEWAY     : 192.168.20.1
DNS         : 8.8.8.8
DHCP SERVER : 192.168.20.3
DHCP LEASE  : 86386, 86400/43200/75600
MAC         : 00:50:79:66:68:1d
LPORT       : 20000
RHOST:PORT  : 127.0.0.1:30000
MTU         : 1500

VPC2>
```

CORE1

```
CORE1#show ip dhcp binding
Bindings from all pools not associated with VRF:
IP address       Client-ID/              Lease expiration        Type       State      Interface
                 Hardware address/
                 User name
192.168.10.21     0100.5079.6668.24       Feb 23 2026 08:01 AM    Automatic  Active     Vlan10
CORE1#
```

CORE1

```
CORE1#show ip dhcp binding
Bindings from all pools not associated with VRF:
IP address       Client-ID/              Lease expiration        Type       State      Interface
                 Hardware address/
                 User name
192.168.10.21     0100.5079.6668.24       Feb 23 2026 08:01 AM    Automatic  Active     Vlan10
CORE1#
```

CORE2

```
CORE2#show ip dhcp binding
Bindings from all pools not associated with VRF:
IP address       Client-ID/              Lease expiration        Type       State      Interface
                 Hardware address/
                 User name
192.168.20.21     0100.5079.6668.1d       Feb 23 2026 08:02 AM    Automatic  Active     Vlan20
CORE2#
```

VPC1

```
VPC1> ping 192.168.10.1

84 bytes from 192.168.10.1 icmp_seq=1 ttl=255 time=4.352 ms
84 bytes from 192.168.10.1 icmp_seq=2 ttl=255 time=3.946 ms
84 bytes from 192.168.10.1 icmp_seq=3 ttl=255 time=2.907 ms
84 bytes from 192.168.10.1 icmp_seq=4 ttl=255 time=3.300 ms
84 bytes from 192.168.10.1 icmp_seq=5 ttl=255 time=2.840 ms

VPC1> ping 192.168.20.1

192.168.20.1 icmp_seq=1 timeout
84 bytes from 192.168.20.1 icmp_seq=2 ttl=255 time=2.238 ms
84 bytes from 192.168.20.1 icmp_seq=3 ttl=255 time=5.291 ms
84 bytes from 192.168.20.1 icmp_seq=4 ttl=255 time=5.444 ms
84 bytes from 192.168.20.1 icmp_seq=5 ttl=255 time=5.386 ms

VPC1> ping 192.168.30.1

84 bytes from 192.168.30.1 icmp_seq=1 ttl=255 time=3.655 ms
84 bytes from 192.168.30.1 icmp_seq=2 ttl=255 time=1.391 ms
84 bytes from 192.168.30.1 icmp_seq=3 ttl=255 time=0.665 ms
84 bytes from 192.168.30.1 icmp_seq=4 ttl=255 time=0.832 ms
84 bytes from 192.168.30.1 icmp_seq=5 ttl=255 time=2.108 ms

VPC1> ping 192.168.40.1

192.168.40.1 icmp_seq=1 timeout
84 bytes from 192.168.40.1 icmp_seq=2 ttl=255 time=1.764 ms
84 bytes from 192.168.40.1 icmp_seq=3 ttl=255 time=1.408 ms
84 bytes from 192.168.40.1 icmp_seq=4 ttl=255 time=1.627 ms
84 bytes from 192.168.40.1 icmp_seq=5 ttl=255 time=4.167 ms

VPC1>
```

Lab 11. Configure IP Addressing and Loopback Interface

Topology

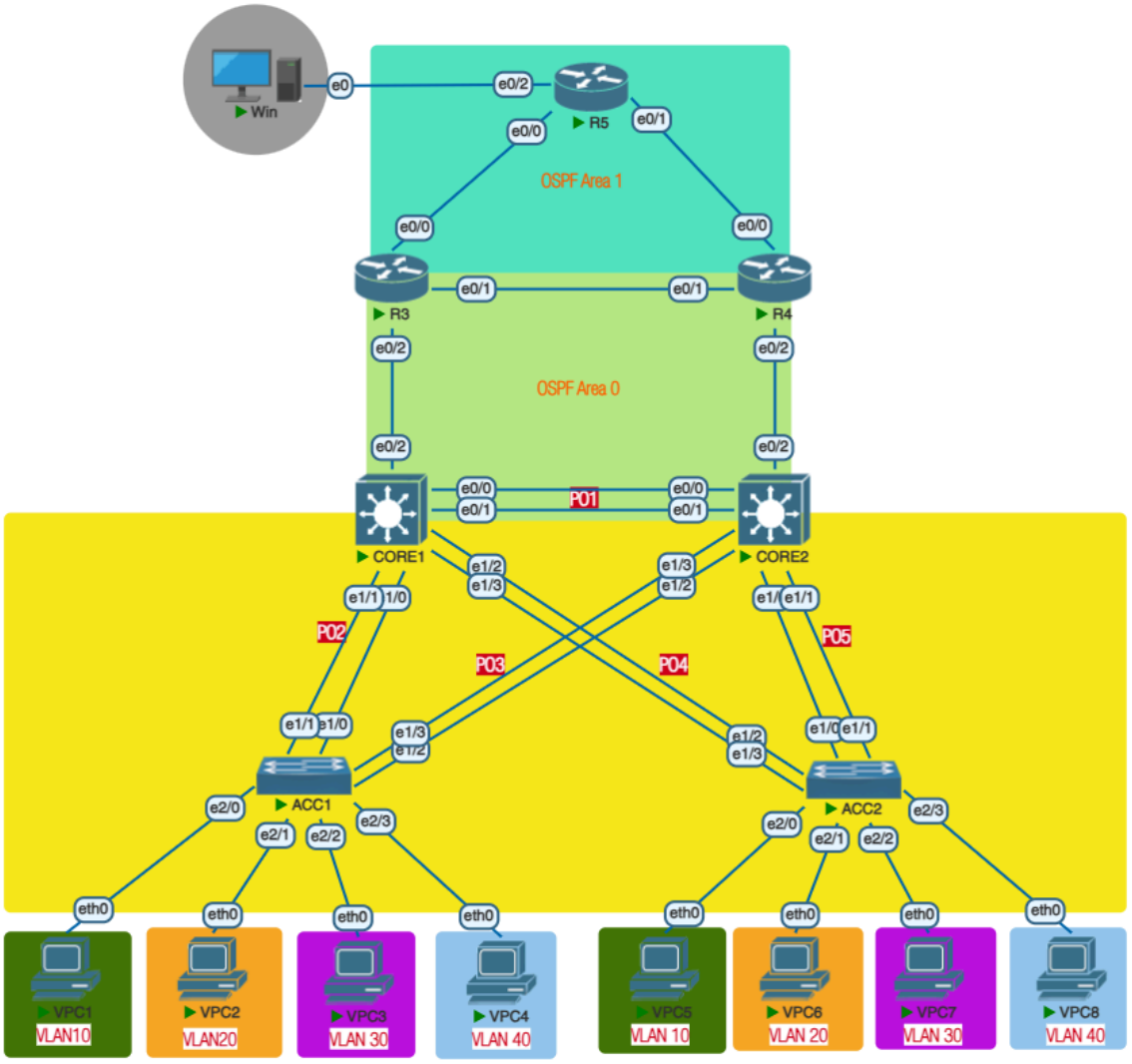

Objective

- Configure IP Addresing and Loopback Interface

Configuration

CORE1
`CORE1(config)#ip routing` `CORE1(config)#int e0/2`

```
CORE1(config-if)#no switchport
CORE1(config-if)#ip add 10.1.3.1 255.255.255.0
CORE1(config-if)#
CORE1(config-if)#int lo0
CORE1(config-if)#ip add 1.1.1.1 255.255.255.255
```

CORE2

```
CORE2(config)#ip routing
CORE2(config)#int e0/2
CORE2(config-if)#no switchport
CORE2(config-if)#ip add 10.2.4.2 255.255.255.0
CORE2(config-if)#
CORE2(config-if)#int lo0
CORE2(config-if)#ip add 2.2.2.2 255.255.255.255
```

R3

```
R3(config-if)#int e0/2
R3(config-if)#ip add 10.1.3.3 255.255.255.0
R3(config-if)#no shutdown
R3(config-if)#
R3(config-if)#int e0/1
R3(config-if)#ip add 10.3.4.3 255.255.255.0
R3(config-if)#no shutdown
R3(config-if)#
R3(config-if)#int e0/0
R3(config-if)#ip add 10.3.5.3 255.255.255.0
R3(config-if)#no shutdown
R3(config-if)#
R3(config-if)#int lo0
R3(config-if)#ip add 3.3.3.3 255.255.255.255
```

R4

```
R4(config)#int e0/2
R4(config-if)#ip add 10.2.4.4 255.255.255.0
R4(config-if)#no shutdown
R4(config-if)#
R4(config-if)#int e0/1
R4(config-if)#ip add 10.3.4.4 255.255.255.0
R4(config-if)#no shutdown
R4(config-if)#
R4(config-if)#int e0/0
R4(config-if)#ip add 10.4.5.4 255.255.255.0
```

```
R4(config-if)#no shutdown
R4(config-if)#
R4(config-if)#int lo0
R4(config-if)#ip add 4.4.4.4 255.255.255.255
```

R5

```
R5(config)#int e0/0
R5(config-if)#ip add 10.3.5.5 255.255.255.0
R5(config-if)#no shutdown
R5(config-if)#
R5(config-if)#int e0/1
R5(config-if)#ip add 10.4.5.5 255.255.255.0
R5(config-if)#no shutdown
R5(config-if)#
R5(config-if)#int e0/2
R5(config-if)#ip add 8.8.8.1 255.255.255.0
R5(config-if)#no shutdown
R5(config-if)#
R5(config-if)#int lo0
R5(config-if)#ip add 5.5.5.5 255.255.255.255
```

Win

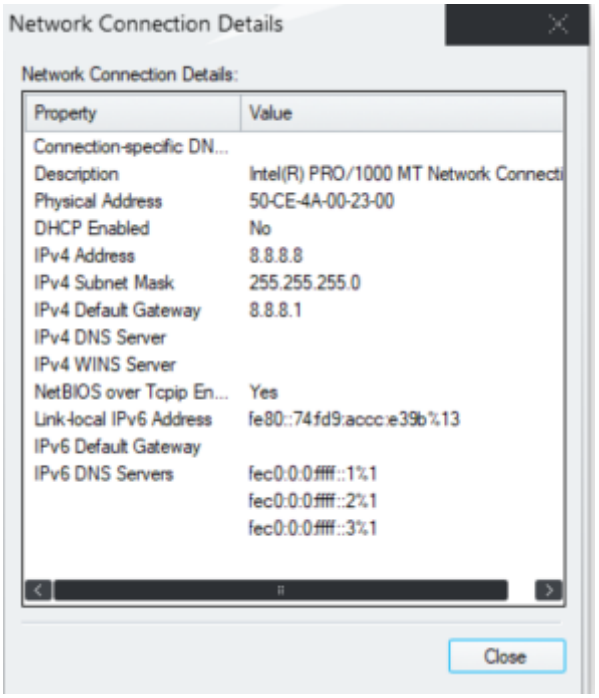

Verification

- `show running-config`
- `show ip interface brief`
- `Ping point-to-point device`

CORE1

```
CORE1#show ip int brief
Interface              IP-Address      OK? Method Status                Protocol
Ethernet0/0            unassigned      YES manual up                    up
Ethernet0/1            unassigned      YES manual up                    up
Ethernet0/2            10.1.3.1        YES manual up                    up
Ethernet0/3            unassigned      YES unset  down                  down
Ethernet1/0            unassigned      YES unset  up                    up
Ethernet1/1            unassigned      YES unset  up                    up
Ethernet1/2            unassigned      YES unset  up                    up
Ethernet1/3            unassigned      YES unset  up                    up
Loopback0              1.1.1.1         YES manual up                    up
Port-channel1          10.1.2.1        YES manual up                    up
Port-channel2          unassigned      YES unset  up                    up
Port-channel4          unassigned      YES unset  up                    up
Vlan10                 192.168.10.2    YES manual up                    up
Vlan20                 192.168.20.2    YES manual up                    up
Vlan30                 192.168.30.2    YES manual up                    up
Vlan40                 192.168.40.2    YES manual up                    up
CORE1#
CORE1#ping 10.1.2.2
Type escape sequence to abort.
Sending 5, 100-byte ICMP Echos to 10.1.2.2, timeout is 2 seconds:
!!!!!
Success rate is 100 percent (5/5), round-trip min/avg/max = 1/1/1 ms
CORE1#
CORE1#ping 10.1.3.3
Type escape sequence to abort.
Sending 5, 100-byte ICMP Echos to 10.1.3.3, timeout is 2 seconds:
!!!!!
Success rate is 100 percent (5/5), round-trip min/avg/max = 1/1/2 ms
CORE1#
```

R3

```
R3#show ip interface brief
Interface              IP-Address      OK? Method Status                Protocol
Ethernet0/0            10.3.5.3        YES manual up                    up
Ethernet0/1            10.3.4.3        YES manual up                    up
Ethernet0/2            10.1.3.3        YES manual up                    up
Ethernet0/3            unassigned      YES unset  administratively down down
Loopback0              3.3.3.3         YES manual up                    up
R3#
R3#ping 10.1.3.1
Type escape sequence to abort.
Sending 5, 100-byte ICMP Echos to 10.1.3.1, timeout is 2 seconds:
!!!!!
Success rate is 100 percent (5/5), round-trip min/avg/max = 1/1/1 ms
R3#
R3#ping 10.3.4.4
Type escape sequence to abort.
Sending 5, 100-byte ICMP Echos to 10.3.4.4, timeout is 2 seconds:
!!!!!
Success rate is 100 percent (5/5), round-trip min/avg/max = 1/1/2 ms
R3#
R3#ping 10.3.5.5
Type escape sequence to abort.
Sending 5, 100-byte ICMP Echos to 10.3.5.5, timeout is 2 seconds:
!!!!!
Success rate is 100 percent (5/5), round-trip min/avg/max = 1/1/1 ms
R3#
```

R5

```
R5#show ip interface brief
Interface              IP-Address      OK? Method Status                Protocol
Ethernet0/0            10.3.5.5        YES manual up                    up
Ethernet0/1            10.4.5.5        YES manual up                    up
Ethernet0/2            8.8.8.1         YES manual up                    up
Ethernet0/3            unassigned      YES unset  administratively down down
Loopback0              5.5.5.5         YES manual up                    up
R5#
R5#ping 8.8.8.8
Type escape sequence to abort.
Sending 5, 100-byte ICMP Echos to 8.8.8.8, timeout is 2 seconds:
!!!!!
Success rate is 100 percent (5/5), round-trip min/avg/max = 1/1/2 ms
R5#
R5#ping 10.3.5.3
Type escape sequence to abort.
Sending 5, 100-byte ICMP Echos to 10.3.5.3, timeout is 2 seconds:
!!!!!
Success rate is 100 percent (5/5), round-trip min/avg/max = 1/1/1 ms
R5#
R5#ping 10.4.5.4
Type escape sequence to abort.
Sending 5, 100-byte ICMP Echos to 10.4.5.4, timeout is 2 seconds:
!!!!!
Success rate is 100 percent (5/5), round-trip min/avg/max = 1/1/1 ms
R5#
```

Lab 12. Configure OSPF, Fast Hello and BFD

Topology

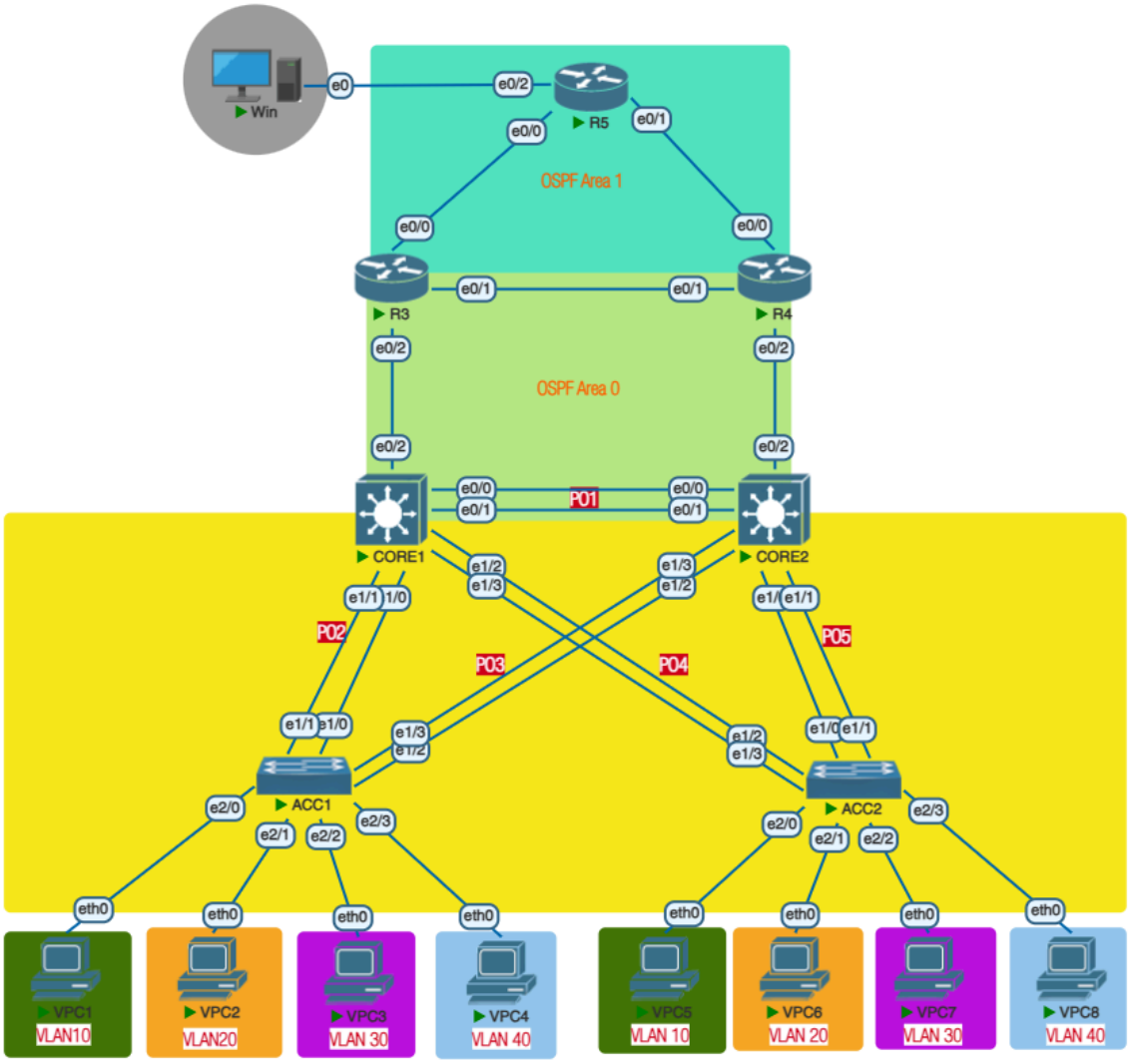

Objective

- Configure OSPF, Fast Hello and BFD

Configuration

CORE1

```
CORE1(config)#router ospf 1
CORE1(config-router)#router-id 1.1.1.1
CORE1(config-router)#network 0.0.0.0 255.255.255.255 area 0
CORE1(config-router)#bfd all-interfaces
```

```
CORE1(config-router)#
CORE1(config-router)#int e0/2
CORE1(config-if)#ip ospf hello-interval 1
CORE1(config-if)#ip ospf dead-interval 3
CORE1(config-if)#bfd interval 50 min_rx 50 multiplier 3
```

CORE2

```
CORE2(config)#router ospf 1
CORE2(config-router)#router-id 2.2.2.2
CORE2(config-router)#network 0.0.0.0 255.255.255.255 area 0
CORE2(config-router)#bfd all-interfaces
CORE2(config-router)#
CORE2(config-router)#int e0/2
CORE2(config-if)#ip ospf hello-interval 1
CORE2(config-if)#ip ospf dead-interval 3
CORE2(config-if)#bfd interval 50 min_rx 50 multiplier 3
```

R3

```
R3(config)#router ospf 1
R3(config-router)#router-id 3.3.3.3
R3(config-router)#network 10.1.3.0 0.0.0.255 area 0
R3(config-router)#network 10.3.4.0 0.0.0.255 area 0
R3(config-router)#network 3.3.3.3 0.0.0.0 area 0
R3(config-router)#network 10.3.5.0 0.0.0.255 area 1
R3(config-router)#bfd all-interfaces
R3(config-router)#
R3(config-router)#int range e0/0 - 2
R3(config-if-range)#ip ospf hello-interval 1
R3(config-if-range)#ip ospf dead-interval 3
R3(config-if-range)#bfd interval 50 min_rx 50 multiplier 3
```

R4

```
R4(config)#router ospf 1
R4(config-router)#router-id 4.4.4.4
R4(config-router)#network 10.2.4.0 0.0.0.255 area 0
R4(config-router)#network 10.3.4.0 0.0.0.255 area 0
R4(config-router)#network 4.4.4.4 0.0.0.0 area 0
R4(config-router)#network 10.4.5.0 0.0.0.255 area 1
R4(config-router)#bfd all-interfaces
R4(config-router)#
R4(config-router)#int range e0/0 - 2
R4(config-if-range)#ip ospf hello-interval 1
```

```
R4(config-if-range)#ip ospf dead-interval 3
R4(config-if-range)#bfd interval 50 min_rx 50 multiplier 3
```

R5

```
R5(config)#router ospf 1
R5(config-router)#router-id 5.5.5.5
R5(config-router)#network 0.0.0.0 255.255.255.255 area 1
R5(config-router)#bfd all-interfaces
R5(config-router)#
R5(config-router)#int range e0/0 - 1
R5(config-if-range)#ip ospf hello-interval 1
R5(config-if-range)#ip ospf dead-interval 3
R5(config-if-range)#bfd interval 50 min_rx 50 multiplier 3
```

Verification

- `show running-config`
- `show ip ospf neighbor`
- `show ip route ospf`
- `show ip protocols`
- `show bfd neighbors`

CORE1

```
CORE1#show ip ospf neighbor

Neighbor ID     Pri   State           Dead Time   Address         Interface
2.2.2.2           1   FULL/BDR        00:00:37    192.168.40.3    Vlan40
2.2.2.2           1   FULL/BDR        00:00:32    192.168.30.3    Vlan30
2.2.2.2           1   FULL/BDR        00:00:38    192.168.20.3    Vlan20
2.2.2.2           1   FULL/BDR        00:00:30    192.168.10.3    Vlan10
2.2.2.2           1   FULL/BDR        00:00:30    10.1.2.2        Port-channel1
3.3.3.3           1   FULL/DR         00:00:02    10.1.3.3        Ethernet0/2
CORE1#
```

```
CORE1#show ip route ospf
Codes: L - local, C - connected, S - static, R - RIP, M - mobile, B - BGP
       D - EIGRP, EX - EIGRP external, O - OSPF, IA - OSPF inter area
       N1 - OSPF NSSA external type 1, N2 - OSPF NSSA external type 2
       E1 - OSPF external type 1, E2 - OSPF external type 2
       i - IS-IS, su - IS-IS summary, L1 - IS-IS level-1, L2 - IS-IS level-2
       ia - IS-IS inter area, * - candidate default, U - per-user static route
       o - ODR, P - periodic downloaded static route, H - NHRP, l - LISP
       a - application route
       + - replicated route, % - next hop override, p - overrides from PfR

Gateway of last resort is not set

      2.0.0.0/32 is subnetted, 1 subnets
O        2.2.2.2 [110/2] via 192.168.40.3, 00:20:16, Vlan40
                 [110/2] via 192.168.30.3, 00:20:16, Vlan30
                 [110/2] via 192.168.20.3, 00:20:26, Vlan20
                 [110/2] via 192.168.10.3, 00:20:16, Vlan10
      3.0.0.0/32 is subnetted, 1 subnets
O        3.3.3.3 [110/11] via 10.1.3.3, 00:17:04, Ethernet0/2
      4.0.0.0/32 is subnetted, 1 subnets
O        4.4.4.4 [110/12] via 192.168.40.3, 00:14:52, Vlan40
                 [110/12] via 192.168.30.3, 00:14:52, Vlan30
                 [110/12] via 192.168.20.3, 00:14:52, Vlan20
                 [110/12] via 192.168.10.3, 00:14:52, Vlan10
      5.0.0.0/32 is subnetted, 1 subnets
O IA     5.5.5.5 [110/21] via 10.1.3.3, 00:13:01, Ethernet0/2
      8.0.0.0/24 is subnetted, 1 subnets
O IA     8.8.8.0 [110/30] via 10.1.3.3, 00:13:01, Ethernet0/2
      10.0.0.0/8 is variably subnetted, 8 subnets, 2 masks
O        10.2.4.0/24 [110/11] via 192.168.40.3, 00:14:52, Vlan40
                     [110/11] via 192.168.30.3, 00:14:52, Vlan30
                     [110/11] via 192.168.20.3, 00:14:52, Vlan20
                     [110/11] via 192.168.10.3, 00:14:52, Vlan10
O        10.3.4.0/24 [110/20] via 10.1.3.3, 00:17:04, Ethernet0/2
O IA     10.3.5.0/24 [110/20] via 10.1.3.3, 00:17:04, Ethernet0/2
O IA     10.4.5.0/24 [110/21] via 192.168.40.3, 00:14:52, Vlan40
                     [110/21] via 192.168.30.3, 00:14:52, Vlan30
                     [110/21] via 192.168.20.3, 00:14:52, Vlan20
                     [110/21] via 192.168.10.3, 00:14:52, Vlan10
CORE1#
```

```
CORE1#show ip protocols
*** IP Routing is NSF aware ***

Routing Protocol is "application"
  Sending updates every 0 seconds
  Invalid after 0 seconds, hold down 0, flushed after 0
  Outgoing update filter list for all interfaces is not set
  Incoming update filter list for all interfaces is not set
  Maximum path: 32
  Routing for Networks:
  Routing Information Sources:
    Gateway         Distance      Last Update
  Distance: (default is 4)

Routing Protocol is "ospf 1"
  Outgoing update filter list for all interfaces is not set
  Incoming update filter list for all interfaces is not set
  Router ID 1.1.1.1
  Number of areas in this router is 1. 1 normal 0 stub 0 nssa
  Maximum path: 4
  Routing for Networks:
    0.0.0.0 255.255.255.255 area 0
  Routing Information Sources:
    Gateway         Distance      Last Update
    4.4.4.4              110      00:13:11
    3.3.3.3              110      00:13:11
    2.2.2.2              110      00:20:26
  Distance: (default is 110)
```

```
CORE1#show bfd neighbors

IPv4 Sessions
NeighAddr                            LD/RD         RH/RS     State     Int
10.1.3.3                              1/2          Up        Up        Et0/2
CORE1#
CORE1#ping 2.2.2.2
Type escape sequence to abort.
Sending 5, 100-byte ICMP Echos to 2.2.2.2, timeout is 2 seconds:
!!!!!
Success rate is 100 percent (5/5), round-trip min/avg/max = 1/1/2 ms
CORE1#
CORE1#ping 3.3.3.3
Type escape sequence to abort.
Sending 5, 100-byte ICMP Echos to 3.3.3.3, timeout is 2 seconds:
!!!!!
Success rate is 100 percent (5/5), round-trip min/avg/max = 1/1/1 ms
CORE1#
CORE1#ping 4.4.4.4
Type escape sequence to abort.
Sending 5, 100-byte ICMP Echos to 4.4.4.4, timeout is 2 seconds:
!!!!!
Success rate is 100 percent (5/5), round-trip min/avg/max = 2/2/4 ms
CORE1#
CORE1#ping 5.5.5.5
Type escape sequence to abort.
Sending 5, 100-byte ICMP Echos to 5.5.5.5, timeout is 2 seconds:
!!!!!
Success rate is 100 percent (5/5), round-trip min/avg/max = 1/1/2 ms
CORE1#
CORE1#ping 8.8.8.8
Type escape sequence to abort.
Sending 5, 100-byte ICMP Echos to 8.8.8.8, timeout is 2 seconds:
!!!!!
Success rate is 100 percent (5/5), round-trip min/avg/max = 1/2/3 ms
CORE1#
```

R5

```
R5#show ip route ospf | begin Gateway
Gateway of last resort is not set

      1.0.0.0/32 is subnetted, 1 subnets
O IA     1.1.1.1 [110/21] via 10.3.5.3, 00:19:26, Ethernet0/0
      2.0.0.0/32 is subnetted, 1 subnets
O IA     2.2.2.2 [110/21] via 10.4.5.4, 00:19:26, Ethernet0/1
      3.0.0.0/32 is subnetted, 1 subnets
O IA     3.3.3.3 [110/11] via 10.3.5.3, 00:19:26, Ethernet0/0
      4.0.0.0/32 is subnetted, 1 subnets
O IA     4.4.4.4 [110/11] via 10.4.5.4, 00:19:26, Ethernet0/1
      10.0.0.0/8 is variably subnetted, 8 subnets, 2 masks
O IA     10.1.2.0/24 [110/25] via 10.4.5.4, 00:19:26, Ethernet0/1
                     [110/25] via 10.3.5.3, 00:19:26, Ethernet0/0
O IA     10.1.3.0/24 [110/20] via 10.3.5.3, 00:19:26, Ethernet0/0
O IA     10.2.4.0/24 [110/20] via 10.4.5.4, 00:19:26, Ethernet0/1
O IA     10.3.4.0/24 [110/20] via 10.4.5.4, 00:19:26, Ethernet0/1
                     [110/20] via 10.3.5.3, 00:19:26, Ethernet0/0
O IA  192.168.10.0/24 [110/21] via 10.4.5.4, 00:19:26, Ethernet0/1
                      [110/21] via 10.3.5.3, 00:19:26, Ethernet0/0
O IA  192.168.20.0/24 [110/21] via 10.4.5.4, 00:19:26, Ethernet0/1
                      [110/21] via 10.3.5.3, 00:19:26, Ethernet0/0
O IA  192.168.30.0/24 [110/21] via 10.4.5.4, 00:19:26, Ethernet0/1
                      [110/21] via 10.3.5.3, 00:19:26, Ethernet0/0
O IA  192.168.40.0/24 [110/21] via 10.4.5.4, 00:19:26, Ethernet0/1
                      [110/21] via 10.3.5.3, 00:19:26, Ethernet0/0
R5#
```

VPC1

```
VPC1> ping 1.1.1.1

84 bytes from 1.1.1.1 icmp_seq=1 ttl=255 time=3.208 ms
84 bytes from 1.1.1.1 icmp_seq=2 ttl=255 time=2.132 ms
84 bytes from 1.1.1.1 icmp_seq=3 ttl=255 time=2.703 ms
84 bytes from 1.1.1.1 icmp_seq=4 ttl=255 time=1.930 ms
84 bytes from 1.1.1.1 icmp_seq=5 ttl=255 time=2.276 ms

VPC1> ping 2.2.2.2

84 bytes from 2.2.2.2 icmp_seq=1 ttl=255 time=5.422 ms
84 bytes from 2.2.2.2 icmp_seq=2 ttl=255 time=5.179 ms
84 bytes from 2.2.2.2 icmp_seq=3 ttl=255 time=2.446 ms
84 bytes from 2.2.2.2 icmp_seq=4 ttl=255 time=4.963 ms
84 bytes from 2.2.2.2 icmp_seq=5 ttl=255 time=5.323 ms

VPC1> ping 3.3.3.3

84 bytes from 3.3.3.3 icmp_seq=1 ttl=254 time=1.280 ms
84 bytes from 3.3.3.3 icmp_seq=2 ttl=254 time=2.957 ms
84 bytes from 3.3.3.3 icmp_seq=3 ttl=254 time=3.419 ms
84 bytes from 3.3.3.3 icmp_seq=4 ttl=254 time=3.917 ms
84 bytes from 3.3.3.3 icmp_seq=5 ttl=254 time=2.019 ms

VPC1> ping 4.4.4.4

84 bytes from 4.4.4.4 icmp_seq=1 ttl=254 time=6.879 ms
84 bytes from 4.4.4.4 icmp_seq=2 ttl=254 time=7.194 ms
84 bytes from 4.4.4.4 icmp_seq=3 ttl=254 time=6.455 ms
84 bytes from 4.4.4.4 icmp_seq=4 ttl=254 time=2.212 ms
84 bytes from 4.4.4.4 icmp_seq=5 ttl=254 time=7.463 ms

VPC1> ping 5.5.5.5

84 bytes from 5.5.5.5 icmp_seq=1 ttl=253 time=6.297 ms
84 bytes from 5.5.5.5 icmp_seq=2 ttl=253 time=4.833 ms
84 bytes from 5.5.5.5 icmp_seq=3 ttl=253 time=5.008 ms
84 bytes from 5.5.5.5 icmp_seq=4 ttl=253 time=5.604 ms
84 bytes from 5.5.5.5 icmp_seq=5 ttl=253 time=5.239 ms

VPC1> ping 8.8.8.8

84 bytes from 8.8.8.8 icmp_seq=1 ttl=125 time=8.995 ms
84 bytes from 8.8.8.8 icmp_seq=2 ttl=125 time=8.293 ms
84 bytes from 8.8.8.8 icmp_seq=3 ttl=125 time=8.564 ms
84 bytes from 8.8.8.8 icmp_seq=4 ttl=125 time=8.089 ms
84 bytes from 8.8.8.8 icmp_seq=5 ttl=125 time=8.205 ms

VPC1>
```

Lab 13. Configure HSRP Tracking

Topology

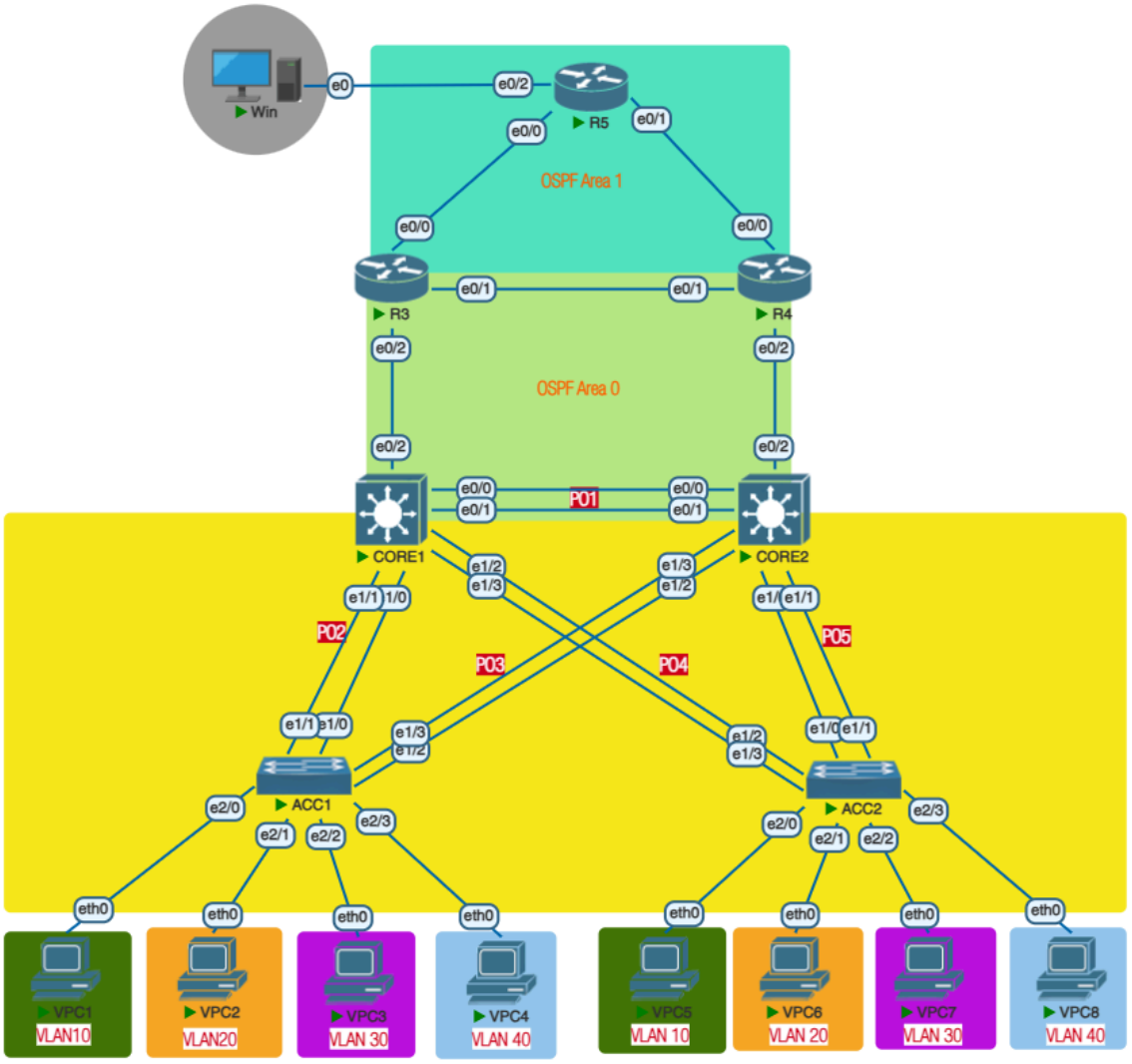

Objective

- CORE1 and CORE2 act as HSRP gateways
- CORE1 ↔ CORE2 connected via L3 EtherChannel (Port-channel1)
- CORE1 uplinks to R3, CORE2 uplinks to R4
- OSPF is used for routing upstream
- Goal: prevent blackhole and ensure automatic failover

- With tracking:
    - CORE1 detects uplink failure
    - CORE1 lowers HSRP priority
    - CORE2 becomes Active gateway
    - Traffic continues normally

Configuration

CORE1

```
CORE1(config)#track 1 interface port-channel1 line-protocol
CORE1(config-track)#exit
CORE1(config)#track 2 interface e0/2 line-protocol
CORE1(config-track)#exit
CORE1(config)#
CORE1(config)#int vlan 10
CORE1(config-if)#standby 10 track 1 decrement 20
CORE1(config-if)#standby 10 track 2 decrement 30
CORE1(config-if)#
CORE1(config-if)#int vlan 30
CORE1(config-if)#standby 10 track 1 decrement 20
CORE1(config-if)#standby 10 track 2 decrement 30
```

CORE2

```
CORE2(config)#track 1 interface port-channel1 line-protocol
CORE2(config-track)#exit
CORE2(config)#track 2 interface e0/2 line-protocol
CORE2(config-track)#exit
CORE2(config)#
CORE2(config)#int vlan 20
CORE2(config-if)# standby 20 track 1 decrement 20
CORE2(config-if)# standby 20 track 2 decrement 30
CORE2(config-if)#
CORE2(config-if)#int vlan 40
CORE2(config-if)#standby 40 track 1 decrement 20
CORE2(config-if)#standby 40 track 2 decrement 30
```

How Tracking Works

- CORE1 priority starts at: 110
- If uplink fails: 110-30 = 80
- CORE2 priority = 100
- CORE2 becomes Active automatically.

Verification

- `show running-config`
- `show standby brief`
- `show track`

CORE1

```
CORE1#show track
Track 1
  Interface Port-channel1 line-protocol
  Line protocol is Up
    1 change, last change 00:11:35
  Tracked by:
    HSRP Vlan10 10
    HSRP Vlan30 10
Track 2
  Interface Ethernet0/2 line-protocol
  Line protocol is Up
    3 changes, last change 00:01:43
  Tracked by:
    HSRP Vlan10 10
    HSRP Vlan30 10
CORE1#
CORE1#show standby brief
                     P indicates configured to preempt.
                     |
Interface   Grp  Pri P State   Active          Standby         Virtual IP
Vl10        10   110 P Active  local           192.168.10.3    192.168.10.1
Vl20        20   90  P Standby 192.168.20.3    local           192.168.20.1
Vl30        30   110 P Active  local           192.168.30.3    192.168.30.1
Vl40        40   90  P Standby 192.168.40.3    local           192.168.40.1
CORE1#
```

CORE2

```
CORE2#show track
Track 1
  Interface Port-channel1 line-protocol
  Line protocol is Up
    1 change, last change 00:09:17
  Tracked by:
    HSRP Vlan20 20
    HSRP Vlan40 40
Track 2
  Interface Ethernet0/2 line-protocol
  Line protocol is Up
    1 change, last change 00:09:10
  Tracked by:
    HSRP Vlan20 20
    HSRP Vlan40 40
CORE2#
CORE2#show standby brief
                     P indicates configured to preempt.
                     |
Interface   Grp  Pri P State   Active          Standby         Virtual IP
Vl10        10   90  P Standby 192.168.10.2    local           192.168.10.1
Vl20        20   110 P Active  local           192.168.20.2    192.168.20.1
Vl30        30   90  P Standby 192.168.30.2    local           192.168.30.1
Vl40        40   110 P Active  local           192.168.40.2    192.168.40.1
CORE2#
```

Lab 14. Configure LLDP

Topology

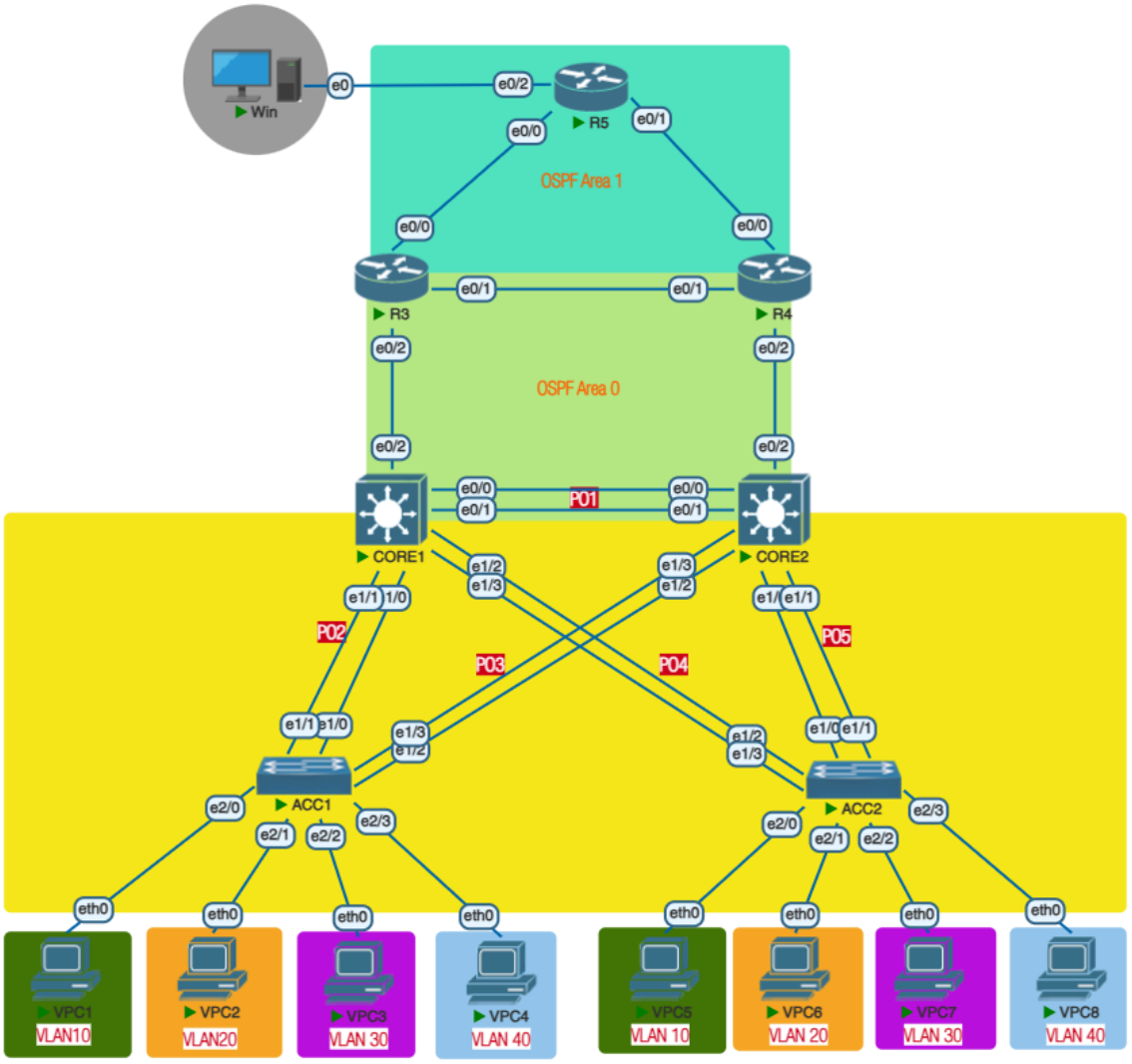

Objective

- Configure LLDP on all devices
- Enable LLDP transmit and receive on uplink interfaces.

Configuration

ACC1, ACC2, CORE1, CORE2, R3, R4, R5
`X(config)#no cdp run` `X(config)#lldp run`

Verification

- `show running-config`
- `show lldp`
- `show lldp neighbors`

R5

```
R5#show lldp

Global LLDP Information:
    Status: ACTIVE
    LLDP advertisements are sent every 30 seconds
    LLDP hold time advertised is 120 seconds
    LLDP interface reinitialisation delay is 2 seconds
R5#
R5#show lldp neighbors
Capability codes:
    (R) Router, (B) Bridge, (T) Telephone, (C) DOCSIS Cable Device
    (W) WLAN Access Point, (P) Repeater, (S) Station, (O) Other

Device ID           Local Intf     Hold-time  Capability      Port ID
R3                  Et0/0          120        R               Et0/0
R4                  Et0/1          120        R               Et0/0

Total entries displayed: 2

R5#
```

CORE1

```
CORE1#show lldp

Global LLDP Information:
    Status: ACTIVE
    LLDP advertisements are sent every 30 seconds
    LLDP hold time advertised is 120 seconds
    LLDP interface reinitialisation delay is 2 seconds
CORE1#
CORE1#show lldp neighbors
Capability codes:
    (R) Router, (B) Bridge, (T) Telephone, (C) DOCSIS Cable Device
    (W) WLAN Access Point, (P) Repeater, (S) Station, (O) Other

Device ID           Local Intf     Hold-time  Capability      Port ID
R3                  Et0/2          120        R               Et0/2

Total entries displayed: 1

CORE1#
```

Lab 15. Failure Testing Procedure

Topology

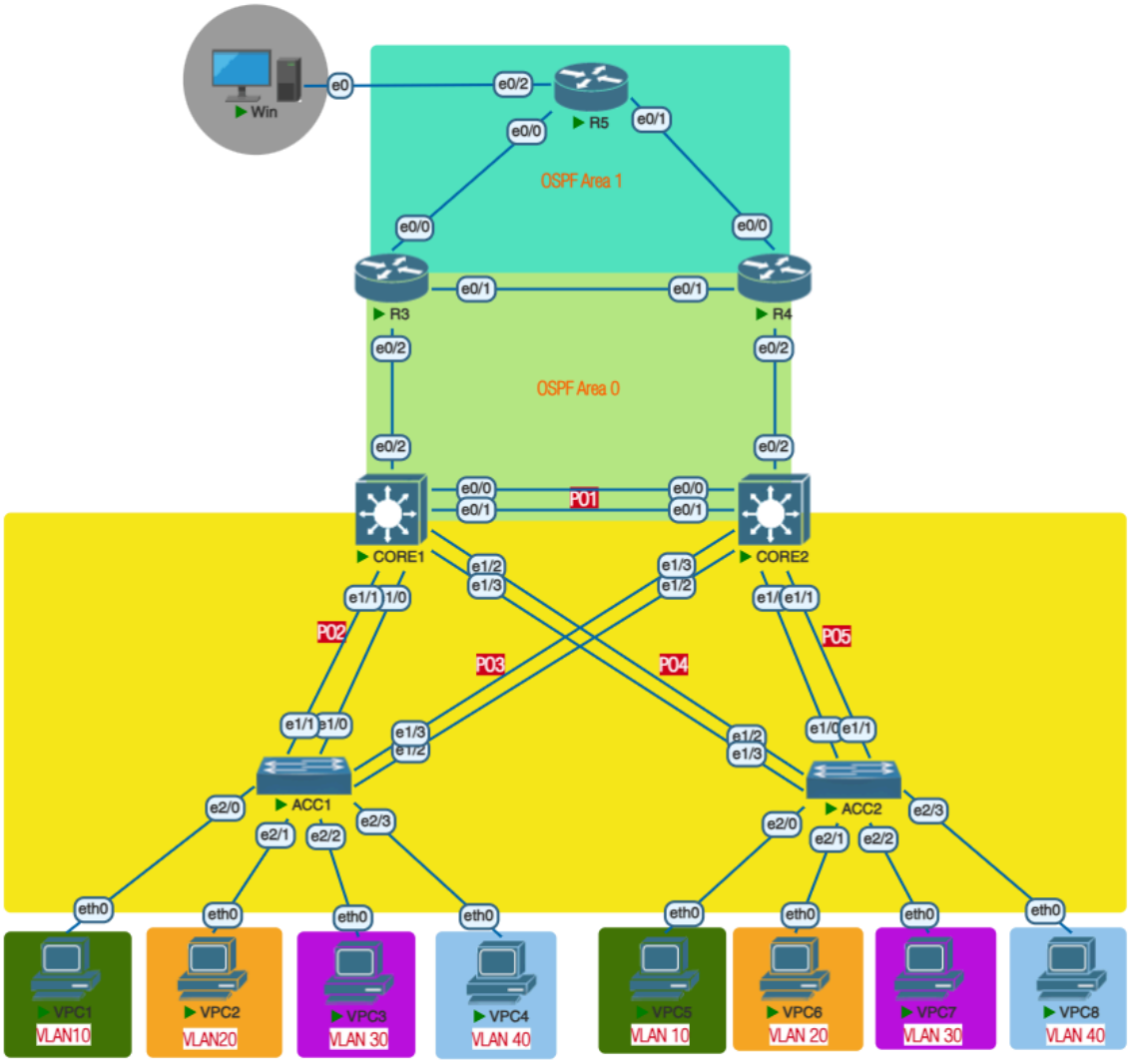

Objective

- 15.1 Verify Normal Network State
- 15.2 Fail One Physical Link in EtherChannel
- 15.3 Fail Entire L3 EtherChannel
- 15.4 Fail CORE1 Uplink to Router
- 15.5 Fail CORE1 Completely
- 15.6 Fail Access Layer Uplink
- 15.7 MST Root Failure Test

Action Step 15.1

Verify Normal Network State

Confirm the network is fully operational before failure testing.

VPC1

```
VPC1> ping 8.8.8.8

84 bytes from 8.8.8.8 icmp_seq=1 ttl=125 time=2.486 ms
84 bytes from 8.8.8.8 icmp_seq=2 ttl=125 time=4.998 ms
84 bytes from 8.8.8.8 icmp_seq=3 ttl=125 time=7.019 ms
84 bytes from 8.8.8.8 icmp_seq=4 ttl=125 time=4.630 ms
84 bytes from 8.8.8.8 icmp_seq=5 ttl=125 time=5.350 ms

VPC1> trace 8.8.8.8
trace to 8.8.8.8, 8 hops max, press Ctrl+C to stop
 1   192.168.10.2   3.627 ms  3.493 ms  1.811 ms
 2   10.1.3.3   2.933 ms  2.119 ms  2.430 ms
 3   10.3.5.5   3.412 ms  1.616 ms  2.086 ms
 4   *8.8.8.8   2.039 ms (ICMP type:3, code:3, Destination port unreachable)  *

VPC1>
```

VPC2

```
VPC2> ping 8.8.8.8

84 bytes from 8.8.8.8 icmp_seq=1 ttl=125 time=12.155 ms
84 bytes from 8.8.8.8 icmp_seq=2 ttl=125 time=5.626 ms
84 bytes from 8.8.8.8 icmp_seq=3 ttl=125 time=9.415 ms
84 bytes from 8.8.8.8 icmp_seq=4 ttl=125 time=10.726 ms
84 bytes from 8.8.8.8 icmp_seq=5 ttl=125 time=4.873 ms

VPC2> trace 8.8.8.8
trace to 8.8.8.8, 8 hops max, press Ctrl+C to stop
 1   192.168.20.3   1.701 ms  2.090 ms  1.384 ms
 2   10.2.4.4   2.740 ms  2.130 ms  2.191 ms
 3   10.4.5.5   4.064 ms  1.339 ms  1.490 ms
 4   *8.8.8.8   2.262 ms (ICMP type:3, code:3, Destination port unreachable)  *

VPC2>
```

VPC3

```
VPC3> ping 8.8.8.8

84 bytes from 8.8.8.8 icmp_seq=1 ttl=125 time=8.049 ms
84 bytes from 8.8.8.8 icmp_seq=2 ttl=125 time=2.870 ms
84 bytes from 8.8.8.8 icmp_seq=3 ttl=125 time=5.596 ms
84 bytes from 8.8.8.8 icmp_seq=4 ttl=125 time=3.422 ms
84 bytes from 8.8.8.8 icmp_seq=5 ttl=125 time=2.673 ms

VPC3> trace 8.8.8.8
trace to 8.8.8.8, 8 hops max, press Ctrl+C to stop
 1   192.168.30.2   6.544 ms  2.710 ms  1.880 ms
 2   10.1.3.3   2.550 ms  3.254 ms  2.860 ms
 3   10.3.5.5   17.649 ms  7.266 ms  6.651 ms
 4   *8.8.8.8   5.656 ms (ICMP type:3, code:3, Destination port unreachable)  *

VPC3>
```

VPC4

```
VPC4> ping 8.8.8.8

84 bytes from 8.8.8.8 icmp_seq=1 ttl=125 time=7.008 ms
84 bytes from 8.8.8.8 icmp_seq=2 ttl=125 time=9.227 ms
84 bytes from 8.8.8.8 icmp_seq=3 ttl=125 time=5.749 ms
84 bytes from 8.8.8.8 icmp_seq=4 ttl=125 time=5.257 ms
84 bytes from 8.8.8.8 icmp_seq=5 ttl=125 time=2.189 ms
t
VPC4> trace 8.8.8.8
trace to 8.8.8.8, 8 hops max, press Ctrl+C to stop
 1   192.168.40.3   0.725 ms  0.607 ms  0.817 ms
 2   10.2.4.4   1.196 ms  1.122 ms  1.089 ms
 3   10.4.5.5   2.091 ms  1.349 ms  1.444 ms
 4   *8.8.8.8   2.557 ms (ICMP type:3, code:3, Destination port unreachable)  *

VPC4>
```

CORE1

```
CORE1#show ip ospf neighbor

Neighbor ID     Pri   State           Dead Time   Address         Interface
2.2.2.2           1   FULL/BDR        00:00:39    192.168.40.3    Vlan40
2.2.2.2           1   FULL/BDR        00:00:30    192.168.30.3    Vlan30
2.2.2.2           1   FULL/BDR        00:00:37    192.168.20.3    Vlan20
2.2.2.2           1   FULL/BDR        00:00:36    192.168.10.3    Vlan10
2.2.2.2           1   FULL/BDR        00:00:35    10.1.2.2        Port-channel1
3.3.3.3           1   FULL/DR         00:00:02    10.1.3.3        Ethernet0/2
CORE1#
CORE1#show bfd neighbors

IPv4 Sessions
NeighAddr                              LD/RD         RH/RS     State     Int
10.1.3.3                                1/4          Up        Up        Et0/2
CORE1#
CORE1#show etherchannel summary
Flags:  D - down        P - bundled in port-channel
        I - stand-alone s - suspended
        H - Hot-standby (LACP only)
        R - Layer3      S - Layer2
        U - in use      N - not in use, no aggregation
        f - failed to allocate aggregator

        M - not in use, minimum links not met
        m - not in use, port not aggregated due to minimum links not met
        u - unsuitable for bundling
        w - waiting to be aggregated
        d - default port

        A - formed by Auto LAG


Number of channel-groups in use: 3
Number of aggregators:           3

Group  Port-channel  Protocol    Ports
------+-------------+-----------+-----------------------------------------------
1      Po1(RU)         LACP      Et0/0(P)    Et0/1(P)
2      Po2(SU)         LACP      Et1/0(P)    Et1/1(P)
4      Po4(SU)         LACP      Et1/2(P)    Et1/3(P)

CORE1#
CORE1#show standby brief
                     P indicates configured to preempt.
                     |
Interface   Grp  Pri P State   Active          Standby         Virtual IP
Vl10        10   110 P Active  local           192.168.10.3    192.168.10.1
Vl20        20   90  P Standby 192.168.20.3    local           192.168.20.1
Vl30        30   110 P Active  local           192.168.30.3    192.168.30.1
Vl40        40   90  P Standby 192.168.40.3    local           192.168.40.1
CORE1#
CORE1#show spanning-tree mst configuration
Name      [NIXTRAIN]
Revision  1     Instances configured 3

Instance  Vlans mapped
--------  -------------------------------------------------------------------
0         1-9,11-19,21-29,31-39,41-4094
1         10,30
2         20,40
-------------------------------------------------------------------------------
CORE1#
```

CORE2

```
CORE2#show ip ospf neighbor

Neighbor ID     Pri   State           Dead Time   Address         Interface
1.1.1.1           1   FULL/DR         00:00:38    192.168.40.2    Vlan40
1.1.1.1           1   FULL/DR         00:00:31    192.168.30.2    Vlan30
1.1.1.1           1   FULL/DR         00:00:32    192.168.20.2    Vlan20
1.1.1.1           1   FULL/DR         00:00:36    192.168.10.2    Vlan10
1.1.1.1           1   FULL/DR         00:00:37    10.1.2.1        Port-channel1
4.4.4.4           1   FULL/DR         00:00:02    10.2.4.4        Ethernet0/2
CORE2#
CORE2#show bfd neighbors

IPv4 Sessions
NeighAddr                              LD/RD         RH/RS     State     Int
10.2.4.4                                1/2          Up        Up        Et0/2
CORE2#
CORE2#show etherchannel summary
Flags:  D - down        P - bundled in port-channel
        I - stand-alone s - suspended
        H - Hot-standby (LACP only)
        R - Layer3      S - Layer2
        U - in use      N - not in use, no aggregation
        f - failed to allocate aggregator

        M - not in use, minimum links not met
        m - not in use, port not aggregated due to minimum links not met
        u - unsuitable for bundling
        w - waiting to be aggregated
        d - default port

        A - formed by Auto LAG


Number of channel-groups in use: 3
Number of aggregators:           3

Group  Port-channel  Protocol    Ports
------+-------------+-----------+-----------------------------------------------
1      Po1(RU)         LACP      Et0/0(P)    Et0/1(P)
3      Po3(SU)         LACP      Et1/2(P)    Et1/3(P)
5      Po5(SU)         LACP      Et1/0(P)    Et1/1(P)

CORE2#
CORE2#show standby brief
                     P indicates configured to preempt.
                     |
Interface   Grp  Pri P State   Active          Standby         Virtual IP
Vl10        10   90  P Standby 192.168.10.2    local           192.168.10.1
Vl20        20   110 P Active  local           192.168.20.2    192.168.20.1
Vl30        30   90  P Standby 192.168.30.2    local           192.168.30.1
Vl40        40   110 P Active  local           192.168.40.2    192.168.40.1
CORE2#
CORE2#show spanning-tree mst configuration
Name      [NIXTRAIN]
Revision  1     Instances configured 3

Instance  Vlans mapped
--------  -------------------------------------------------------------------
0         1-9,11-19,21-29,31-39,41-4094
1         10,30
2         20,40
-------------------------------------------------------------------------------
CORE2#
```

Action Step 15.2

Fail One Physical Link in EtherChannel

Verify EtherChannel redundancy

CORE1

```
CORE1#
CORE1#conf t
Enter configuration commands, one per line.  End with CNTL/Z.
CORE1(config)#int e1/1
CORE1(config-if)#shutdown
CORE1(config-if)#
*Feb 22 11:13:19.917: %LINK-5-CHANGED: Interface Ethernet1/1, changed state to administratively down
*Feb 22 11:13:20.917: %LINEPROTO-5-UPDOWN: Line protocol on Interface Ethernet1/1, changed state to down
CORE1(config-if)#
CORE1(config-if)#do show etherchannel summary
Flags:  D - down        P - bundled in port-channel
        I - stand-alone s - suspended
        H - Hot-standby (LACP only)
        R - Layer3      S - Layer2
        U - in use      N - not in use, no aggregation
        f - failed to allocate aggregator

        M - not in use, minimum links not met
        m - not in use, port not aggregated due to minimum links not met
        u - unsuitable for bundling
        w - waiting to be aggregated
        d - default port

        A - formed by Auto LAG


Number of channel-groups in use: 3
Number of aggregators:           3

Group  Port-channel  Protocol    Ports
------+-------------+-----------+-----------------------------------------------
1      Po1(RU)         LACP      Et0/0(P)    Et0/1(P)
2      Po2(SU)         LACP      Et1/0(P)    Et1/1(D)
4      Po4(SU)         LACP      Et1/2(P)    Et1/3(P)

CORE1(config-if)#
```

Expected Behavior

- Port-channel remains UP
- Traffic continues normally
- No packet loss

VPC1

```
VPC1> ping 8.8.8.8

84 bytes from 8.8.8.8 icmp_seq=1 ttl=125 time=6.883 ms
84 bytes from 8.8.8.8 icmp_seq=2 ttl=125 time=1.669 ms
84 bytes from 8.8.8.8 icmp_seq=3 ttl=125 time=4.266 ms
84 bytes from 8.8.8.8 icmp_seq=4 ttl=125 time=4.737 ms
84 bytes from 8.8.8.8 icmp_seq=5 ttl=125 time=6.828 ms

VPC1> trace 8.8.8.8
trace to 8.8.8.8, 8 hops max, press Ctrl+C to stop
 1   192.168.10.2   3.806 ms  3.810 ms  1.842 ms
 2   10.1.3.3   4.579 ms  4.110 ms  2.824 ms
 3   10.3.5.5   3.621 ms  2.629 ms  3.113 ms
 4   *8.8.8.8   2.922 ms (ICMP type:3, code:3, Destination port unreachable)  *
```

Action Step 15.3

Fail Entire L3 EtherChannel

Verify OSPF fast convergence.

CORE1

```
CORE1(config-if)#do show ip int brief
Interface              IP-Address      OK? Method Status                Protocol
Ethernet0/0            unassigned      YES manual up                    up
Ethernet0/1            unassigned      YES manual up                    up
Ethernet0/2            10.1.3.1        YES manual up                    up
Ethernet0/3            unassigned      YES unset  down                  down
Ethernet1/0            unassigned      YES unset  up                    up
Ethernet1/1            unassigned      YES unset  administratively down down
Ethernet1/2            unassigned      YES unset  up                    up
Ethernet1/3            unassigned      YES unset  up                    up
Loopback0              1.1.1.1         YES manual up                    up
Port-channel1          10.1.2.1        YES manual up                    up
Port-channel2          unassigned      YES unset  up                    up
Port-channel4          unassigned      YES unset  up                    up
Vlan10                 192.168.10.2    YES manual up                    up
Vlan20                 192.168.20.2    YES manual up                    up
Vlan30                 192.168.30.2    YES manual up                    up
Vlan40                 192.168.40.2    YES manual up                    up
CORE1(config-if)#
CORE1(config-if)#int po1
CORE1(config-if)#shutdown
CORE1(config-if)#
*Feb 22 19:29:02.337: %TRACK-6-STATE: 1 interface Po1 line-protocol Up -> Down
CORE1(config-if)#
*Feb 22 19:29:02.342: %OSPF-5-ADJCHG: Process 1, Nbr 2.2.2.2 on Port-channel1 from 2WAY to DOWN, Neighbor Down: Interface do
wn or detached
CORE1(config-if)#
*Feb 22 19:29:04.334: %LINK-5-CHANGED: Interface Ethernet0/0, changed state to administratively down
*Feb 22 19:29:04.335: %LINK-5-CHANGED: Interface Ethernet0/1, changed state to administratively down
*Feb 22 19:29:04.340: %LINK-5-CHANGED: Interface Port-channel1, changed state to administratively down
*Feb 22 19:29:05.336: %LINEPROTO-5-UPDOWN: Line protocol on Interface Ethernet0/0, changed state to down
*Feb 22 19:29:05.336: %LINEPROTO-5-UPDOWN: Line protocol on Interface Ethernet0/1, changed state to down
*Feb 22 19:29:05.340: %LINEPROTO-5-UPDOWN: Line protocol on Interface Port-channel1, changed state to down
CORE1(config-if)#
CORE1(config-if)#no shutdown
CORE1(config-if)#
*Feb 22 19:29:13.636: %TRACK-6-STATE: 1 interface Po1 line-protocol Down -> Up
CORE1(config-if)#
*Feb 22 19:29:13.661: %LINK-3-UPDOWN: Interface Port-channel1, changed state to up
*Feb 22 19:29:13.661: %LINK-3-UPDOWN: Interface Ethernet0/0, changed state to up
*Feb 22 19:29:13.661: %LINK-3-UPDOWN: Interface Ethernet0/1, changed state to up
*Feb 22 19:29:14.662: %LINEPROTO-5-UPDOWN: Line protocol on Interface Port-channel1, changed state to up
*Feb 22 19:29:14.662: %LINEPROTO-5-UPDOWN: Line protocol on Interface Ethernet0/0, changed state to up
*Feb 22 19:29:14.662: %LINEPROTO-5-UPDOWN: Line protocol on Interface Ethernet0/1, changed state to up
CORE1(config-if)#
```

Expected Behavior

- OSPF neighbor goes DOWN
- Routing reconverges

Action Step 15.4

Fail CORE1 Uplink to Router

Verify HSRP tracking works.

CORE1

```
CORE1#show standby brief
                     P indicates configured to preempt.
                     |
Interface   Grp  Pri P State   Active          Standby         Virtual IP
Vl10        10   110 P Active  local           192.168.10.3    192.168.10.1
Vl20        20   90  P Standby 192.168.20.3    local           192.168.20.1
Vl30        30   110 P Active  local           192.168.30.3    192.168.30.1
Vl40        40   90  P Standby 192.168.40.3    local           192.168.40.1
CORE1#
CORE1#
CORE1#conf t
Enter configuration commands, one per line.  End with CNTL/Z.
CORE1(config)#int e0/2
CORE1(config-if)#shutdown
CORE1(config-if)#
*Feb 22 19:39:48.018: %TRACK-6-STATE: 2 interface Et0/2 line-protocol Up -> Down
*Feb 22 19:39:48.023: %OSPF-5-ADJCHG: Process 1, Nbr 3.3.3.3 on Ethernet0/2 from FULL to DOWN, Neighbor Down: Interface down
 or detached
*Feb 22 19:39:48.023: %BFD-6-BFD_SESS_DESTROYED: BFD-SYSLOG: bfd_session_destroyed,  ld:1 neigh proc:OSPF, handle:1 act
CORE1(config-if)#
*Feb 22 19:39:48.286: %HSRP-5-STATECHANGE: Vlan10 Grp 10 state Active -> Speak
CORE1(config-if)#
*Feb 22 19:39:50.019: %LINK-5-CHANGED: Interface Ethernet0/2, changed state to administratively down
*Feb 22 19:39:51.019: %LINEPROTO-5-UPDOWN: Line protocol on Interface Ethernet0/2, changed state to down
CORE1(config-if)#
CORE1(config-if)#d
*Feb 22 19:40:00.304: %HSRP-5-STATECHANGE: Vlan10 Grp 10 state Speak -> Standby
CORE1(config-if)#do show standby brief
                     P indicates configured to preempt.
                     |
Interface   Grp  Pri P State   Active          Standby         Virtual IP
Vl10        10   80  P Standby 192.168.10.3    local           192.168.10.1
Vl20        20   90  P Standby 192.168.20.3    local           192.168.20.1
Vl30        30   110 P Active  local           192.168.30.3    192.168.30.1
Vl40        40   90  P Standby 192.168.40.3    local           192.168.40.1
CORE1(config-if)#
CORE1(config-if)#
```

Expected Behavior

- HSRP priority decreases
- CORE2 becomes Active gateway
- BFD detects failure in ~150 ms
- OSPF neighbor goes DOWN

CORE1

```
CORE1(config-if)#no shutdown
CORE1(config-if)#
*Feb 22 19:41:16.810: %TRACK-6-STATE: 2 interface Et0/2 line-protocol Down -> Up
CORE1(config-if)#
*Feb 22 19:41:18.237: %LINK-3-UPDOWN: Interface Ethernet0/2, changed state to up
*Feb 22 19:41:18.790: %HSRP-5-STATECHANGE: Vlan10 Grp 10 state Standby -> Active
*Feb 22 19:41:19.241: %LINEPROTO-5-UPDOWN: Line protocol on Interface Ethernet0/2, changed state to up
CORE1(config-if)#
*Feb 22 19:41:20.169: %OSPF-5-ADJCHG: Process 1, Nbr 3.3.3.3 on Ethernet0/2 from LOADING to FULL, Loading Done
CORE1(config-if)#
*Feb 22 19:41:20.175: %BFD-6-BFD_SESS_CREATED: BFD-SYSLOG: bfd_session_created, neigh 10.1.3.3 proc:OSPF, idb:Ethernet0/2 ha
ndle:1 act
*Feb 22 19:41:20.177: %BFDFSM-6-BFD_SESS_UP: BFD-SYSLOG: BFD session ld:1 handle:1 is going UP
CORE1(config-if)#do show standby brief
                     P indicates configured to preempt.
                     |
Interface   Grp  Pri P State   Active          Standby         Virtual IP
Vl10        10   110 P Active  local           192.168.10.3    192.168.10.1
Vl20        20   90  P Standby 192.168.20.3    local           192.168.20.1
Vl30        30   110 P Active  local           192.168.30.3    192.168.30.1
Vl40        40   90  P Standby 192.168.40.3    local           192.168.40.1
CORE1(config-if)#
CORE1(config-if)#
```

Expected Behavior

- BFD session restored
- OSPF neighbor becomes FULL
- Routing restored

Action Step 15.5

Fail CORE1 Completely

Verify full gateway redundancy.

CORE1

```
CORE1#reload
Proceed with reload? [confirm]

*Feb 22 19:48:50.140: %SYS-5-RELOAD: Reload requested by console. Reload Reason: Reload command.
*Feb 22 19:48:50.212: %HSRP-5-STATECHANGE: Vlan10 Grp 10 state Active -> Init
*Feb 22 19:48:50.214: %HSRP-5-STATECHANGE: Vlan20 Grp 20 state Standby -> Init
*Feb 22 19:48:50.214: %HSRP-5-STATECHANGE: Vlan30 Grp 30 state Active -> Init
*Feb 22 19:48:50.215: %HSRP-5-STATECHANGE: Vlan40 Grp 40 state Standby -> Init
unix_reload()
UNIX ERR:tcgetattr:Inappropriate ioctl for device

               Restricted Rights Legend

Use, duplication, or disclosure by the Government is
subject to restrictions as set forth in subparagraph
(c) of the Commercial Computer Software - Restricted
Rights clause at FAR sec. 52.227-19 and subparagraph
(c) (1) (ii) of the Rights in Technical Data and Computer
Software clause at DFARS sec. 252.227-7013.

           cisco Systems, Inc.
           170 West Tasman Drive
           San Jose, California 95134-1706


Cisco IOS Software, Linux Software (I86BI_LINUXL2-ADVENTERPRISEK9-M), Version 15.2(CML_NIGHTLY_20180510)FLO_DSGS7, EARLY DEP
LOYMENT DEVELOPMENT BUILD, synced to  V152_6_0_81_E
Technical Support: http://www.cisco.com/techsupport
Copyright (c) 1986-2018 by Cisco Systems, Inc.
Compiled Thu 10-May-18 02:45 by mmen
This product contains cryptographic features and is subject to United
States and local country laws governing import, export, transfer and
use. Delivery of Cisco cryptographic products does not imply
third-party authority to import, export, distribute or use encryption.
Importers, exporters, distributors and users are responsible for
compliance with U.S. and local country laws. By using this product you
agree to comply with applicable laws and regulations. If you are unable
to comply with U.S. and local laws, return this product immediately.

A summary of U.S. laws governing Cisco cryptographic products may be found at:
http://www.cisco.com/wwl/export/crypto/tool/stqrg.html

If you require further assistance please contact us by sending email to
export@cisco.com.

Linux Unix (Intel-x86) processor with 921513K bytes of memory.
Processor board ID 67160068
8 Ethernet interfaces
1024K bytes of NVRAM.
```

CORE2

```
CORE2#show standby brief
                     P indicates configured to preempt.
                     |
Interface   Grp  Pri P State   Active          Standby         Virtual IP
Vl10        10   90  P Active  local           unknown         192.168.10.1
Vl20        20   110 P Active  local           unknown         192.168.20.1
Vl30        30   90  P Active  local           unknown         192.168.30.1
Vl40        40   110 P Active  local           unknown         192.168.40.1
CORE2#
CORE2#show ip ospf neighbor

Neighbor ID     Pri   State           Dead Time   Address         Interface
1.1.1.1           1   INIT/DROTHER    00:00:18    192.168.40.2    Vlan40
1.1.1.1           1   INIT/DROTHER    00:00:18    192.168.30.2    Vlan30
1.1.1.1           1   INIT/DROTHER    00:00:18    192.168.20.2    Vlan20
1.1.1.1           1   INIT/DROTHER    00:00:18    192.168.10.2    Vlan10
4.4.4.4           1   FULL/DR         00:00:02    10.2.4.4        Ethernet0/2
CORE2#
CORE2#show bfd neighbor

IPv4 Sessions
NeighAddr                              LD/RD         RH/RS     State     Int
10.2.4.4                                1/7          Up        Up        Et0/2
CORE2#
CORE2#
*Feb 22 19:49:45.351: %OSPF-5-ADJCHG: Process 1, Nbr 1.1.1.1 on Vlan10 from INIT to DOWN, Neighbor Down: Dead timer expired
*Feb 22 19:49:45.351: %OSPF-5-ADJCHG: Process 1, Nbr 1.1.1.1 on Vlan20 from INIT to DOWN, Neighbor Down: Dead timer expired
*Feb 22 19:49:45.360: %OSPF-5-ADJCHG: Process 1, Nbr 1.1.1.1 on Vlan40 from INIT to DOWN, Neighbor Down: Dead timer expired
*Feb 22 19:49:45.360: %OSPF-5-ADJCHG: Process 1, Nbr 1.1.1.1 on Vlan30 from INIT to DOWN, Neighbor Down: Dead timer expired
CORE2#
```

VPC1

```
VPC1> ping 8.8.8.8

84 bytes from 8.8.8.8 icmp_seq=1 ttl=125 time=5.250 ms
84 bytes from 8.8.8.8 icmp_seq=2 ttl=125 time=3.529 ms
84 bytes from 8.8.8.8 icmp_seq=3 ttl=125 time=6.181 ms
8.8.8.8 icmp_seq=4 timeout
8.8.8.8 icmp_seq=5 timeout

VPC1> ping 8.8.8.8

84 bytes from 8.8.8.8 icmp_seq=1 ttl=125 time=8.780 ms
84 bytes from 8.8.8.8 icmp_seq=2 ttl=125 time=7.035 ms
84 bytes from 8.8.8.8 icmp_seq=3 ttl=125 time=10.467 ms
84 bytes from 8.8.8.8 icmp_seq=4 ttl=125 time=4.366 ms
84 bytes from 8.8.8.8 icmp_seq=5 ttl=125 time=9.117 ms

VPC1> trace 8.8.8.8
trace to 8.8.8.8, 8 hops max, press Ctrl+C to stop
 1   192.168.10.3   14.584 ms  2.735 ms  3.434 ms
 2   10.2.4.4   3.020 ms  2.389 ms  2.561 ms
 3   10.4.5.5   2.111 ms  1.781 ms  1.922 ms
 4   *8.8.8.8   5.206 ms (ICMP type:3, code:3, Destination port unreachable)  *

VPC1>
```

Expected Behavior

- CORE2 becomes Active for all VLANs
- Network remains operational

Action Step 15.6

Fail Access Layer Uplink

Verify MST and EtherChannel redundancy.

ACC1

```
ACC1#show ip int brief
Interface              IP-Address      OK? Method Status                Protocol
Ethernet0/0            unassigned      YES unset  down                  down
Ethernet0/1            unassigned      YES unset  down                  down
Ethernet0/2            unassigned      YES unset  down                  down
Ethernet0/3            unassigned      YES unset  down                  down
Ethernet1/0            unassigned      YES unset  up                    up
Ethernet1/1            unassigned      YES unset  up                    up
Ethernet1/2            unassigned      YES unset  up                    up
Ethernet1/3            unassigned      YES unset  up                    up
Ethernet2/0            unassigned      YES unset  up                    up
Ethernet2/1            unassigned      YES unset  up                    up
Ethernet2/2            unassigned      YES unset  up                    up
Ethernet2/3            unassigned      YES unset  up                    up
Port-channel2          unassigned      YES unset  up                    up
Port-channel3          unassigned      YES unset  up                    up
ACC1#
ACC1#conf t
Enter configuration commands, one per line.  End with CNTL/Z.
ACC1(config)#int po2
ACC1(config-if)#shutdown
ACC1(config-if)#
*Feb 22 20:10:25.825: %LINK-5-CHANGED: Interface Ethernet1/0, changed state to administratively down
*Feb 22 20:10:25.825: %LINK-5-CHANGED: Interface Ethernet1/1, changed state to administratively down
*Feb 22 20:10:25.826: %LINK-5-CHANGED: Interface Port-channel2, changed state to administratively down
*Feb 22 20:10:26.826: %LINEPROTO-5-UPDOWN: Line protocol on Interface Ethernet1/0, changed state to down
*Feb 22 20:10:26.826: %LINEPROTO-5-UPDOWN: Line protocol on Interface Ethernet1/1, changed state to down
*Feb 22 20:10:26.827: %LINEPROTO-5-UPDOWN: Line protocol on Interface Port-channel2, changed state to down
ACC1(config-if)#
```

CORE1

```
CORE1#show ip int brief
Interface              IP-Address      OK? Method Status                Protocol
Ethernet0/0            unassigned      YES manual up                    up
Ethernet0/1            unassigned      YES manual up                    up
Ethernet0/2            10.1.3.1        YES NVRAM  up                    up
Ethernet0/3            unassigned      YES unset  down                  down
Ethernet1/0            unassigned      YES unset  up                    down
Ethernet1/1            unassigned      YES unset  up                    down
Ethernet1/2            unassigned      YES unset  up                    up
Ethernet1/3            unassigned      YES unset  up                    up
Loopback0              1.1.1.1         YES NVRAM  up                    up
Port-channel1          10.1.2.1        YES NVRAM  up                    up
Port-channel2          unassigned      YES unset  down                  down
Port-channel4          unassigned      YES unset  up                    up
Vlan10                 192.168.10.2    YES NVRAM  up                    up
Vlan20                 192.168.20.2    YES NVRAM  up                    up
Vlan30                 192.168.30.2    YES NVRAM  up                    up
Vlan40                 192.168.40.2    YES NVRAM  up                    up
CORE1#
```

VPC1

```
VPC1> ping 8.8.8.8

84 bytes from 8.8.8.8 icmp_seq=1 ttl=125 time=8.988 ms
84 bytes from 8.8.8.8 icmp_seq=2 ttl=125 time=14.621 ms
84 bytes from 8.8.8.8 icmp_seq=3 ttl=125 time=13.161 ms
84 bytes from 8.8.8.8 icmp_seq=4 ttl=125 time=6.037 ms
84 bytes from 8.8.8.8 icmp_seq=5 ttl=125 time=7.921 ms

VPC1> trace 8.8.8.8
trace to 8.8.8.8, 8 hops max, press Ctrl+C to stop
 1   192.168.10.2   5.497 ms  3.057 ms  3.100 ms
 2   10.1.3.3   4.006 ms  4.196 ms  2.767 ms
 3   10.3.5.5   2.594 ms  2.636 ms  2.588 ms
 4   *8.8.8.8   3.344 ms (ICMP type:3, code:3, Destination port unreachable)  *

VPC1>
```

VPC2

```
VPC2> ping 8.8.8.8

84 bytes from 8.8.8.8 icmp_seq=1 ttl=125 time=12.006 ms
84 bytes from 8.8.8.8 icmp_seq=2 ttl=125 time=10.826 ms
84 bytes from 8.8.8.8 icmp_seq=3 ttl=125 time=3.009 ms
84 bytes from 8.8.8.8 icmp_seq=4 ttl=125 time=12.267 ms
84 bytes from 8.8.8.8 icmp_seq=5 ttl=125 time=2.519 ms

VPC2> trace 8.8.8.8
trace to 8.8.8.8, 8 hops max, press Ctrl+C to stop
 1   192.168.20.3   2.734 ms  1.919 ms  1.981 ms
 2   10.2.4.4   2.944 ms  2.012 ms  3.216 ms
 3   10.4.5.5   3.336 ms  1.873 ms  2.064 ms
 4   *8.8.8.8   2.793 ms (ICMP type:3, code:3, Destination port unreachable)  *

VPC2>
```

Expected Behavior

- No loss of connectivity
- Ping test must succeed

Action Step 15.7

MST Root Failure Test

Verify spanning-tree reconvergence.

CORE1

```
CORE1#show spanning-tree mst

##### MST0    vlans mapped:   1-9,11-19,21-29,31-39,41-4094
Bridge        address aabb.cc00.0400  priority      32768 (32768 sysid 0)
Root          this switch for the CIST
Operational   hello time 2 , forward delay 15, max age 20, txholdcount 6
Configured    hello time 2 , forward delay 15, max age 20, max hops    20

Interface        Role Sts Cost      Prio.Nbr Type
---------------- ---- --- --------- -------- -------------------------------
Po2              Desg FWD 1000000   128.66   P2p
Po4              Desg FWD 1000000   128.67   P2p

##### MST1    vlans mapped:   10,30
Bridge        address aabb.cc00.0400  priority      4097  (4096 sysid 1)
Root          this switch for MST1

Interface        Role Sts Cost      Prio.Nbr Type
---------------- ---- --- --------- -------- -------------------------------
Po2              Desg FWD 1000000   128.66   P2p
Po4              Desg FWD 1000000   128.67   P2p

##### MST2    vlans mapped:   20,40
Bridge        address aabb.cc00.0400  priority      8194  (8192 sysid 2)
Root          address aabb.cc00.0500  priority      4098  (4096 sysid 2)
              port    Po2             cost          2000000   rem hops 18

Interface        Role Sts Cost      Prio.Nbr Type
---------------- ---- --- --------- -------- -------------------------------
Po2              Root FWD 1000000   128.66   P2p
Po4              Altn BLK 1000000   128.67   P2p

CORE1#
CORE1#reload
Proceed with reload? [confirm]

*Feb 22 20:26:42.398: %SYS-5-RELOAD: Reload requested by console. Reload Reason: Reload command.
*Feb 22 20:26:42.469: %HSRP-5-STATECHANGE: Vlan10 Grp 10 state Active -> Init
*Feb 22 20:26:42.470: %HSRP-5-STATECHANGE: Vlan20 Grp 20 state Standby -> Init
*Feb 22 20:26:42.470: %HSRP-5-STATECHANGE: Vlan30 Grp 30 state Active -> Init
*Feb 22 20:26:42.470: %HSRP-5-STATECHANGE: Vlan40 Grp 40 state Standby -> Init
unix_reload()
```

CORE2

```
CORE2#show spanning-tree mst

##### MST0    vlans mapped:   1-9,11-19,21-29,31-39,41-4094
Bridge        address aabb.cc00.0500  priority      32768 (32768 sysid 0)
Root          this switch for the CIST
Operational   hello time 2 , forward delay 15, max age 20, txholdcount 6
Configured    hello time 2 , forward delay 15, max age 20, max hops    20

Interface        Role Sts Cost      Prio.Nbr Type
---------------- ---- --- --------- -------- -------------------------------
Po3              Desg FWD 1000000   128.66   P2p
Po5              Desg FWD 1000000   128.67   P2p

##### MST1    vlans mapped:   10,30
Bridge        address aabb.cc00.0500  priority      8193  (8192 sysid 1)
Root          this switch for MST1

Interface        Role Sts Cost      Prio.Nbr Type
---------------- ---- --- --------- -------- -------------------------------
Po3              Desg FWD 1000000   128.66   P2p
Po5              Desg FWD 1000000   128.67   P2p

##### MST2    vlans mapped:   20,40
Bridge        address aabb.cc00.0500  priority      4098  (4096 sysid 2)
Root          this switch for MST2

Interface        Role Sts Cost      Prio.Nbr Type
---------------- ---- --- --------- -------- -------------------------------
Po3              Desg FWD 1000000   128.66   P2p
Po5              Desg FWD 1000000   128.67   P2p

CORE2#
```

Expected Behavior

- CORE2 becomes root bridge for all VLANS

Final Configuration

ACC1

```
ACC1#show run
Building configuration...

Current configuration : 2323 bytes
!
! Last configuration change at 23:26:59 UTC Sun Feb 22 2026
!
version 15.2
service timestamps debug datetime msec
service timestamps log datetime msec
no service password-encryption
service compress-config
!
hostname ACC1
!
boot-start-marker
boot-end-marker
!
!
!
no aaa new-model
!
!
!
!
!
no ip icmp rate-limit unreachable
!
!
!
no ip domain-lookup
ip cef
no ipv6 cef
!
!
!
spanning-tree mode mst
spanning-tree extend system-id
!
spanning-tree mst configuration
 name NIXTRAIN
 revision 1
 instance 1 vlan 10, 30
 instance 2 vlan 20, 40
!
!
lldp run
```

```
no cdp run
!
!
!
!
!
!
!
!
!
!
!
!
!
interface Port-channel2
 switchport trunk encapsulation dot1q
 switchport mode trunk
!
interface Port-channel3
 switchport trunk encapsulation dot1q
 switchport mode trunk
!
interface Ethernet0/0
!
interface Ethernet0/1
!
interface Ethernet0/2
!
interface Ethernet0/3
!
interface Ethernet1/0
 description P02 to CORE1
 switchport trunk encapsulation dot1q
 switchport mode trunk
 channel-group 2 mode passive
!
interface Ethernet1/1
 description P02 to CORE1
 switchport trunk encapsulation dot1q
 switchport mode trunk
 channel-group 2 mode passive
!
interface Ethernet1/2
 description P03 to CORE2
 switchport trunk encapsulation dot1q
 switchport mode trunk
 channel-group 3 mode passive
!
interface Ethernet1/3
 description P03 to CORE2
 switchport trunk encapsulation dot1q
```

```
 switchport mode trunk
 channel-group 3 mode passive
!
interface Ethernet2/0
 switchport access vlan 10
 switchport mode access
 spanning-tree portfast edge
 spanning-tree bpduguard enable
!
interface Ethernet2/1
 switchport access vlan 20
 switchport mode access
 spanning-tree portfast edge
 spanning-tree bpduguard enable
!
interface Ethernet2/2
 switchport access vlan 30
 spanning-tree portfast edge
 spanning-tree bpduguard enable
!
interface Ethernet2/3
 switchport access vlan 40
 spanning-tree portfast edge
 spanning-tree bpduguard enable
!
ip forward-protocol nd
!
ip tcp synwait-time 5
ip http server
!
ip ssh server algorithm encryption aes128-ctr aes192-ctr
aes256-ctr
ip ssh client algorithm encryption aes128-ctr aes192-ctr
aes256-ctr
!
!
!
!
!
control-plane
!
!
line con 0
 exec-timeout 0 0
 privilege level 15
 logging synchronous
line aux 0
 exec-timeout 0 0
 privilege level 15
 logging synchronous
line vty 0 4
 login
```

```
!
!
!
end
```

ACC2

```
ACC2#show run
Building configuration...

Current configuration : 2321 bytes
!
! Last configuration change at 23:29:10 UTC Sun Feb 22 2026
!
version 15.2
service timestamps debug datetime msec
service timestamps log datetime msec
no service password-encryption
service compress-config
!
hostname ACC2
!
boot-start-marker
boot-end-marker
!
!
!
no aaa new-model
!
!
!
!
!
no ip icmp rate-limit unreachable
!
!
!
no ip domain-lookup
ip cef
no ipv6 cef
!
!
!
spanning-tree mode mst
spanning-tree extend system-id
!
spanning-tree mst configuration
 name NIXTRAIN
 revision 1
 instance 1 vlan 10, 30
```

```
 instance 2 vlan 20, 40
!
!
lldp run
no cdp run
!
!
!
!
!
!
!
!
!
!
!
!
!
interface Port-channel4
 switchport trunk encapsulation dot1q
 switchport mode trunk
!
interface Port-channel5
 switchport trunk encapsulation dot1q
 switchport mode trunk
!
interface Ethernet0/0
!
interface Ethernet0/1
!
interface Ethernet0/2
!
interface Ethernet0/3
!
interface Ethernet1/0
 description P05 to CORE1
 switchport trunk encapsulation dot1q
 switchport mode trunk
 channel-group 5 mode passive
!
interface Ethernet1/1
 description P05 to CORE1
 switchport trunk encapsulation dot1q
 switchport mode trunk
 channel-group 5 mode passive
!
interface Ethernet1/2
 description P04 to CORE2
 switchport trunk encapsulation dot1q
 switchport mode trunk
 channel-group 4 mode active
```

```
!
interface Ethernet1/3
 description P04 to CORE2
 switchport trunk encapsulation dot1q
 switchport mode trunk
 channel-group 4 mode active
!
interface Ethernet2/0
 switchport access vlan 10
 switchport mode access
 spanning-tree portfast edge
 spanning-tree bpduguard enable
!
interface Ethernet2/1
 switchport access vlan 20
 switchport mode access
 spanning-tree portfast edge
 spanning-tree bpduguard enable
!
interface Ethernet2/2
 switchport access vlan 30
 spanning-tree portfast edge
 spanning-tree bpduguard enable
!
interface Ethernet2/3
 switchport access vlan 40
 spanning-tree portfast edge
 spanning-tree bpduguard enable
!
ip forward-protocol nd
!
ip tcp synwait-time 5
ip http server
!
ip ssh server algorithm encryption aes128-ctr aes192-ctr
aes256-ctr
ip ssh client algorithm encryption aes128-ctr aes192-ctr
aes256-ctr
!
!
!
!
!
control-plane
!
!
line con 0
 exec-timeout 0 0
 privilege level 15
 logging synchronous
line aux 0
 exec-timeout 0 0
```

```
 privilege level 15
 logging synchronous
line vty 0 4
 login
!
!
!
end
```

CORE1

```
CORE1#show run
Building configuration...

Current configuration : 3498 bytes
!
! Last configuration change at 23:32:57 UTC Sun Feb 22 2026
!
version 15.2
service timestamps debug datetime msec
service timestamps log datetime msec
no service password-encryption
service compress-config
!
hostname CORE1
!
boot-start-marker
boot-end-marker
!
!
!
no aaa new-model
!
!
!
!
!
no ip icmp rate-limit unreachable
!
ip dhcp excluded-address 192.168.10.1 192.168.10.20
ip dhcp excluded-address 192.168.30.1 192.168.30.20
!
ip dhcp pool VLAN10
 network 192.168.10.0 255.255.255.0
 default-router 192.168.10.1
 dns-server 8.8.8.8
!
ip dhcp pool VLAN30
 network 192.168.30.0 255.255.255.0
 default-router 192.168.30.1
```

```
 dns-server 8.8.8.8
!
!
no ip domain-lookup
ip cef
no ipv6 cef
!
!
!
spanning-tree mode mst
spanning-tree extend system-id
!
spanning-tree mst configuration
 name NIXTRAIN
 revision 1
 instance 1 vlan 10, 30
 instance 2 vlan 20, 40
!
spanning-tree mst 1 priority 4096
spanning-tree mst 2 priority 8192
!
lldp run
no cdp run
!
track 1 interface Port-channel1 line-protocol
!
track 2 interface Ethernet0/2 line-protocol
!
!
!
!
!
!
!
!
!
!
!
!
!
!
interface Loopback0
 ip address 1.1.1.1 255.255.255.255
!
interface Port-channel1
 no switchport
 ip address 10.1.2.1 255.255.255.0
!
interface Port-channel2
 switchport trunk encapsulation dot1q
 switchport mode trunk
!
```

```
interface Port-channel4
 switchport trunk encapsulation dot1q
 switchport mode trunk
!
interface Ethernet0/0
 description P01 to CORE2
 no switchport
 no ip address
 channel-group 1 mode active
!
interface Ethernet0/1
 description P01 to CORE2
 no switchport
 no ip address
 channel-group 1 mode active
!
interface Ethernet0/2
 no switchport
 ip address 10.1.3.1 255.255.255.0
 ip ospf dead-interval 3
 ip ospf hello-interval 1
 bfd interval 50 min_rx 50 multiplier 3
!
interface Ethernet0/3
!
interface Ethernet1/0
 description P02 to ACC1
 switchport trunk encapsulation dot1q
 switchport mode trunk
 channel-group 2 mode active
!
interface Ethernet1/1
 description P02 to ACC1
 switchport trunk encapsulation dot1q
 switchport mode trunk
 channel-group 2 mode active
!
interface Ethernet1/2
 description P04 to ACC2
 switchport trunk encapsulation dot1q
 switchport mode trunk
 channel-group 4 mode active
!
interface Ethernet1/3
 description P04 to ACC2
 switchport trunk encapsulation dot1q
 switchport mode trunk
 channel-group 4 mode active
!
interface Vlan10
 ip address 192.168.10.2 255.255.255.0
 standby 10 ip 192.168.10.1
```

```
 standby 10 priority 110
 standby 10 preempt
 standby 10 track 1 decrement 20
 standby 10 track 2 decrement 30
!
interface Vlan20
 ip address 192.168.20.2 255.255.255.0
 standby 20 ip 192.168.20.1
 standby 20 priority 90
 standby 20 preempt
!
interface Vlan30
 ip address 192.168.30.2 255.255.255.0
 standby 10 track 1 decrement 20
 standby 10 track 2 decrement 30
 standby 30 ip 192.168.30.1
 standby 30 priority 110
 standby 30 preempt
!
interface Vlan40
 ip address 192.168.40.2 255.255.255.0
 standby 40 ip 192.168.40.1
 standby 40 priority 90
 standby 40 preempt
!
router ospf 1
 router-id 1.1.1.1
 network 0.0.0.0 255.255.255.255 area 0
 bfd all-interfaces
!
ip forward-protocol nd
!
ip tcp synwait-time 5
ip http server
!
ip ssh server algorithm encryption aes128-ctr aes192-ctr
aes256-ctr
ip ssh client algorithm encryption aes128-ctr aes192-ctr
aes256-ctr
!
!
!
!
!
control-plane
!
!
line con 0
 exec-timeout 0 0
 privilege level 15
 logging synchronous
line aux 0
```

```
 exec-timeout 0 0
 privilege level 15
 logging synchronous
line vty 0 4
 login
!
!
!
end
```

CORE2

```
CORE2#show run
Building configuration...

Current configuration : 3498 bytes
!
! Last configuration change at 23:28:56 UTC Sun Feb 22 2026
!
version 15.2
service timestamps debug datetime msec
service timestamps log datetime msec
no service password-encryption
service compress-config
!
hostname CORE2
!
boot-start-marker
boot-end-marker
!
!
!
no aaa new-model
!
!
!
!
!
no ip icmp rate-limit unreachable
!
ip dhcp excluded-address 192.168.20.1 192.168.20.20
ip dhcp excluded-address 192.168.40.1 192.168.40.20
!
ip dhcp pool VLAN20
 network 192.168.20.0 255.255.255.0
 default-router 192.168.20.1
 dns-server 8.8.8.8
!
ip dhcp pool VLAN40
 network 192.168.40.0 255.255.255.0
```

```
 default-router 192.168.40.1
 dns-server 8.8.8.8
!
!
no ip domain-lookup
ip cef
no ipv6 cef
!
!
!
spanning-tree mode mst
spanning-tree extend system-id
!
spanning-tree mst configuration
 name NIXTRAIN
 revision 1
 instance 1 vlan 10, 30
 instance 2 vlan 20, 40
!
spanning-tree mst 1 priority 8192
spanning-tree mst 2 priority 4096
!
lldp run
no cdp run
!
track 1 interface Port-channel1 line-protocol
!
track 2 interface Ethernet0/2 line-protocol
!
!
!
!
!
!
!
!
!
!
!
!
!
!
interface Loopback0
 ip address 2.2.2.2 255.255.255.255
!
interface Port-channel1
 no switchport
 ip address 10.1.2.2 255.255.255.0
!
interface Port-channel3
 switchport trunk encapsulation dot1q
 switchport mode trunk
```

```
!
interface Port-channel5
 switchport trunk encapsulation dot1q
 switchport mode trunk
!
interface Ethernet0/0
 description P01 to CORE1
 no switchport
 no ip address
 channel-group 1 mode active
!
interface Ethernet0/1
 description P01 to CORE1
 no switchport
 no ip address
 channel-group 1 mode active
!
interface Ethernet0/2
 no switchport
 ip address 10.2.4.2 255.255.255.0
 ip ospf dead-interval 3
 ip ospf hello-interval 1
 bfd interval 50 min_rx 50 multiplier 3
!
interface Ethernet0/3
!
interface Ethernet1/0
 description P05 to ACC2
 switchport trunk encapsulation dot1q
 switchport mode trunk
 channel-group 5 mode active
!
interface Ethernet1/1
 description P05 to ACC2
 switchport trunk encapsulation dot1q
 switchport mode trunk
 channel-group 5 mode active
!
interface Ethernet1/2
 description P03 to ACC1
 switchport trunk encapsulation dot1q
 switchport mode trunk
 channel-group 3 mode active
!
interface Ethernet1/3
 description P03 to ACC1
 switchport trunk encapsulation dot1q
 switchport mode trunk
 channel-group 3 mode active
!
interface Vlan10
 ip address 192.168.10.3 255.255.255.0
```

```
 standby 10 ip 192.168.10.1
 standby 10 priority 90
 standby 10 preempt
!
interface Vlan20
 ip address 192.168.20.3 255.255.255.0
 standby 20 ip 192.168.20.1
 standby 20 priority 110
 standby 20 preempt
 standby 20 track 1 decrement 20
 standby 20 track 2 decrement 30
!
interface Vlan30
 ip address 192.168.30.3 255.255.255.0
 standby 30 ip 192.168.30.1
 standby 30 priority 90
 standby 30 preempt
!
interface Vlan40
 ip address 192.168.40.3 255.255.255.0
 standby 40 ip 192.168.40.1
 standby 40 priority 110
 standby 40 preempt
 standby 40 track 1 decrement 20
 standby 40 track 2 decrement 30
!
router ospf 1
 router-id 2.2.2.2
 network 0.0.0.0 255.255.255.255 area 0
 bfd all-interfaces
!
ip forward-protocol nd
!
ip tcp synwait-time 5
ip http server
!
ip ssh server algorithm encryption aes128-ctr aes192-ctr
aes256-ctr
ip ssh client algorithm encryption aes128-ctr aes192-ctr
aes256-ctr
!
!
!
!
!
control-plane
!
!
line con 0
 exec-timeout 0 0
 privilege level 15
 logging synchronous
```

```
line aux 0
 exec-timeout 0 0
 privilege level 15
 logging synchronous
line vty 0 4
 login
!
!
!
end
```

R3

```
R3#show run
Building configuration...

Current configuration : 1543 bytes
!
! Last configuration change at 23:28:43 UTC Sun Feb 22 2026
!
version 15.7
service timestamps debug datetime msec
service timestamps log datetime msec
no service password-encryption
!
hostname R3
!
boot-start-marker
boot-end-marker
!
!
!
no aaa new-model
!
!
!
mmi polling-interval 60
no mmi auto-configure
no mmi pvc
mmi snmp-timeout 180
!
!
!
!
!
!
!
!
!
!
```

```
!
!
!
!
!


!
!
!
!
ip cef
no ipv6 cef
!
multilink bundle-name authenticated
!
!
!
!
!
!
!
!
!
!
redundancy
!
lldp run
no cdp run
!
!
!
!
!
!
!
!
!
!
!
!
!
!
interface Loopback0
 ip address 3.3.3.3 255.255.255.255
!
interface Ethernet0/0
 ip address 10.3.5.3 255.255.255.0
 ip ospf dead-interval 3
 ip ospf hello-interval 1
 duplex auto
 bfd interval 50 min_rx 50 multiplier 3
```

```
!
interface Ethernet0/1
 ip address 10.3.4.3 255.255.255.0
 ip ospf dead-interval 3
 ip ospf hello-interval 1
 duplex auto
 bfd interval 50 min_rx 50 multiplier 3
!
interface Ethernet0/2
 ip address 10.1.3.3 255.255.255.0
 ip ospf dead-interval 3
 ip ospf hello-interval 1
 duplex auto
 bfd interval 50 min_rx 50 multiplier 3
!
interface Ethernet0/3
 no ip address
 shutdown
 duplex auto
!
router ospf 1
 router-id 3.3.3.3
 network 3.3.3.3 0.0.0.0 area 0
 network 10.1.3.0 0.0.0.255 area 0
 network 10.3.4.0 0.0.0.255 area 0
 network 10.3.5.0 0.0.0.255 area 1
 bfd all-interfaces
!
ip forward-protocol nd
!
!
no ip http server
no ip http secure-server
!
ipv6 ioam timestamp
!
!
!
control-plane
!
!
!
!
!
!
!
!
line con 0
 logging synchronous
line aux 0
line vty 0 4
 login
```

```
 transport input none
!
!
end
```

R4

```
R4#show run
Building configuration...

Current configuration : 1543 bytes
!
! Last configuration change at 23:28:38 UTC Sun Feb 22 2026
!
version 15.7
service timestamps debug datetime msec
service timestamps log datetime msec
no service password-encryption
!
hostname R4
!
boot-start-marker
boot-end-marker
!
!
!
no aaa new-model
!
!
!
mmi polling-interval 60
no mmi auto-configure
no mmi pvc
mmi snmp-timeout 180
!
!
!
!
!
!
!
!
!
!
!
!
!
!
```

```
!
!
!
!
ip cef
no ipv6 cef
!
multilink bundle-name authenticated
!
!
!
!
!
!
!
!
!
!
redundancy
!
lldp run
no cdp run
!
!
!
!
!
!
!
!
!
!
!
!
!
!
interface Loopback0
 ip address 4.4.4.4 255.255.255.255
!
interface Ethernet0/0
 ip address 10.4.5.4 255.255.255.0
 ip ospf dead-interval 3
 ip ospf hello-interval 1
 duplex auto
 bfd interval 50 min_rx 50 multiplier 3
!
interface Ethernet0/1
 ip address 10.3.4.4 255.255.255.0
 ip ospf dead-interval 3
 ip ospf hello-interval 1
```

```
 duplex auto
 bfd interval 50 min_rx 50 multiplier 3
!
interface Ethernet0/2
 ip address 10.2.4.4 255.255.255.0
 ip ospf dead-interval 3
 ip ospf hello-interval 1
 duplex auto
 bfd interval 50 min_rx 50 multiplier 3
!
interface Ethernet0/3
 no ip address
 shutdown
 duplex auto
!
router ospf 1
 router-id 4.4.4.4
 network 4.4.4.4 0.0.0.0 area 0
 network 10.2.4.0 0.0.0.255 area 0
 network 10.3.4.0 0.0.0.255 area 0
 network 10.4.5.0 0.0.0.255 area 1
 bfd all-interfaces
!
ip forward-protocol nd
!
!
no ip http server
no ip http secure-server
!
ipv6 ioam timestamp
!
!
!
control-plane
!
!
!
!
!
!
!
!
line con 0
 logging synchronous
line aux 0
line vty 0 4
 login
 transport input none
!
!
end
```

R5

```
R5#show run
Building configuration...

Current configuration : 1354 bytes
!
! Last configuration change at 23:28:29 UTC Sun Feb 22 2026
!
version 15.7
service timestamps debug datetime msec
service timestamps log datetime msec
no service password-encryption
!
hostname R5
!
boot-start-marker
boot-end-marker
!
!
!
no aaa new-model
!
!
!
mmi polling-interval 60
no mmi auto-configure
no mmi pvc
mmi snmp-timeout 180
!
!
!
!
!
!
!
!
!
!
!
!
!
!


!
!
!
!
ip cef
```

```
no ipv6 cef
!
multilink bundle-name authenticated
!
!
!
!
!
!
!
!
!
!
redundancy
!
lldp run
no cdp run
!
!
!
!
!
!
!
!
!
!
!
!
!
!
interface Loopback0
 ip address 5.5.5.5 255.255.255.255
!
interface Ethernet0/0
 ip address 10.3.5.5 255.255.255.0
 ip ospf dead-interval 3
 ip ospf hello-interval 1
 duplex auto
 bfd interval 50 min_rx 50 multiplier 3
!
interface Ethernet0/1
 ip address 10.4.5.5 255.255.255.0
 ip ospf dead-interval 3
 ip ospf hello-interval 1
 duplex auto
 bfd interval 50 min_rx 50 multiplier 3
!
interface Ethernet0/2
 ip address 8.8.8.1 255.255.255.0
 duplex auto
!
```

```
interface Ethernet0/3
 no ip address
 shutdown
 duplex auto
!
router ospf 1
 router-id 5.5.5.5
 network 0.0.0.0 255.255.255.255 area 1
 bfd all-interfaces
!
ip forward-protocol nd
!
!
no ip http server
no ip http secure-server
!
ipv6 ioam timestamp
!
!
!
control-plane
!
!
!
!
!
!
!
!
line con 0
 logging synchronous
line aux 0
line vty 0 4
 login
 transport input none
!
!
end
```